Digitized Automation for a Changing World

Delta High Performance Vector Control Drive C2000 Plus Series

COMTECH

Via Polesine, 1/4
10020 Cambiano (TO) Italy
+39 011 9454523

www.e-comtech.it

info@e-comtech.it

www.deltaww.com

reddot design award
winner 2010

DELTA
Smarter. Greener. Together.

Delta Vector Control Drive C2000 Plus Series

The C2000 Plus Series features precise speed, torque and position control functions that are suitable for both sensor and sensorless types of synchronous and asynchronous motors.

With higher overload capacity, the power range of C2000 Plus Series 460 V models reach up to 560 kW, providing the best performance and stability for a variety of heavy duty and constant torque applications, such as production, processing, food industry, chemical industry, metal processing, rubber and plastics, municipal & infrastructure, and other industries.

For advanced manufacturing, the C2000 Plus Series is equipped with built-in PLC functions and supports various protocols for the ultimate in system flexibility and fast data exchange.

As your best choice for highly efficient solution, the C2000 Plus Series is the power to drive you to reach the Automation for a Changing World!

Table of Contents

Standard Models	3
LCD Keypad	6
Features and Applications	7
Modular Design	9
High-Speed Network	11
Examples for Different Loads & Model Name	12
Product Specifications	13
General Specifications	17
Operating Environment, Storage & Transportation	18
Dimensions	19
Wiring	27
Optional Accessories	30
Accessories	35
Ordering Information & Series Overview	43

Standard Models C2000 Plus

Power range：230 V 0.75 ~ 90 kW

230 V (kW)	0.75	1.5	2.2	3.7	5.5	7.5	11	15	18.5
230 V (HP)	1	2	3	5	7.5	10	15	20	25
Frame Size	A				B			C	

Power range：460 V 0.75 ~ 560 kW

460 V (kW)	0.75	1.5	2.2	3.7	4.0	5.5	7.5	11	15
460 V (HP)	1	2	3	5	5	7.5	10	15	20
Frame Size	A						B		

Standard Models C2000

Power range: 575 V 1.5 ~ 15 kW

575 V (kW)	1.5	2.2	3.7	5.5	7.5	11	15
575 V (HP)	2	3	5	7.5	10	15	20
Frame Size	A			B			

Power range: 690 V 18.5 ~ 630 kW

690 V (kW)	18.5	22	30	37	45	55	75	90	110
690 V (HP)	25	30	40	50	60	75	100	125	150
Frame Size	C				D		E		

C2000 Plus Overload capability

- Heavy Duty 150% 60 / 180% 3 sec.
- Super Heavy Duty 150% 60 / 200% 3 sec.

*Note：C2000 Plus power range is for 230 V and 460 V models

22	30	37	45	55	75	90
30	40	50	60	75	100	125
	D		E			F

18.5	22	30	37	45	55	75	90	110	132	160	185	220	280	315	355	450	500	560
25	30	40	50	60	75	100	125	150	175	215	250	300	375	425	475	600	650	750
C			D0		D		E		F		G		H					

132	160	200	250	315	400	450	560	630
175	215	270	335	425	530	600	745	840
	F		G		H			

C2000 Plus Power rating

- 460 V 0.75 kW ~ 560 kW (New)
- 230 V 0.75 kW ~ 90 kW

460 V Max. power rated up to 560 kW

Advanced Drive Controls

▪ High Performance

1. For both synchronous and asynchronous motors
2. Dual rating design (heavy duty / super heavy duty)
3. Speed / torque / position control mode
4. High bandwidth control

▪ Versatile Drive Controls

1. Built-in safe stop function
2. Built-in PLC function
3. Built-in brake unit
4. Supports various network protocols
5. Position control

▪ Environmental Adaptability

1. 50˚C operating temperature
2. Built-in DC reactor
3. Coated circuit boards
4. Built-in EMC filter
5. International safety standard (CE / UL / cUL)

*Note: Please refer to the Product Specification

▪ Modular Design

1. Hot pluggable LCD keypad
2. I/O extension cards
3. Various PG (encoder) feedback cards
4. Network cards for fieldbus modules
5. Removable fan

Intelligent PLC Functions

- Built-in 10k steps capacity of PLC functions. Distributed control and independent operation are easily achieved via network connection
- CANopen Master protocol and PLC functions provide synchronous control and fast data exchange

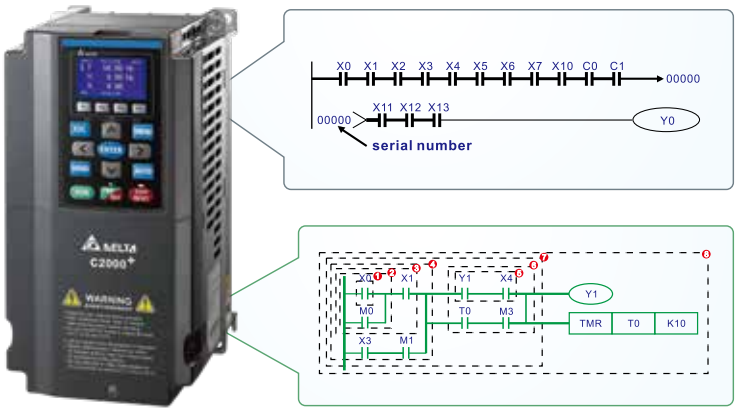

Quick and Easy Parameters Setting via the LCD Keypad

- Multi-column display for the drive status
- Simple and intuitive operation
- User-defined parameter groups
- Real-time clock (RTC) function
- Multi-language display
- Copy function saves parameters and PLC programs to the keypad memory for easy backup/transferring to other drive
- IP66 protection level

F1 to F4: User-defined function keys

Selection keys

LED displays the current drive status

Start Wizard

Multi-Language

- English
- German
- Italian
- French
- Spanish
- Portuguese
- Polish
- Russian
- Turkish
- Chinese

Application Selection

Without parameter group…..

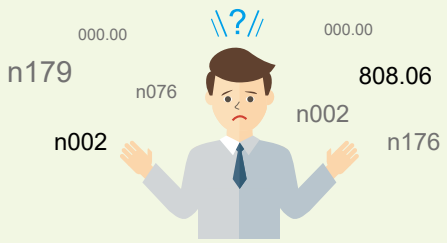

C2000 Plus parameter group function simplifies the drive setting procedures. Various applications are provided:

01: User-defined

02: AHU

03: Fan

04: Pump

05: Compressor

Positioning Control

Homing

Determines the original position of the motion system, so as to ensure the motor starts from the same coordinates during each machining process

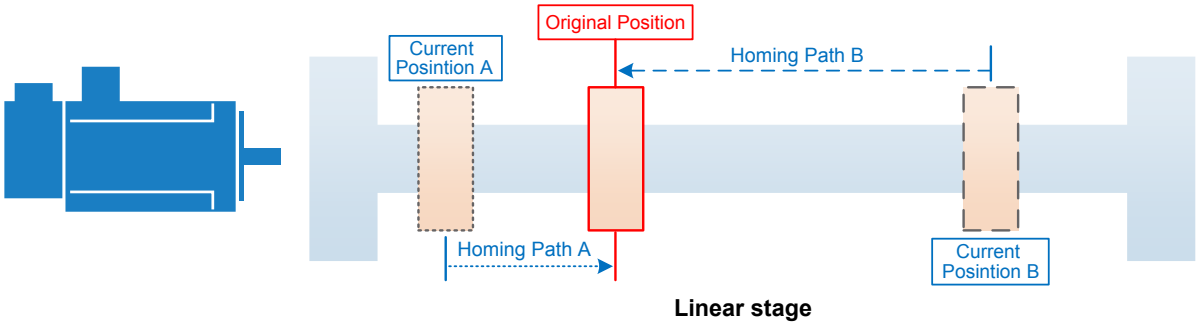

Multi-point Positioning

Allows the motor to operate from one position to another, and switches up to 15 positions with 4 multi-function input terminals

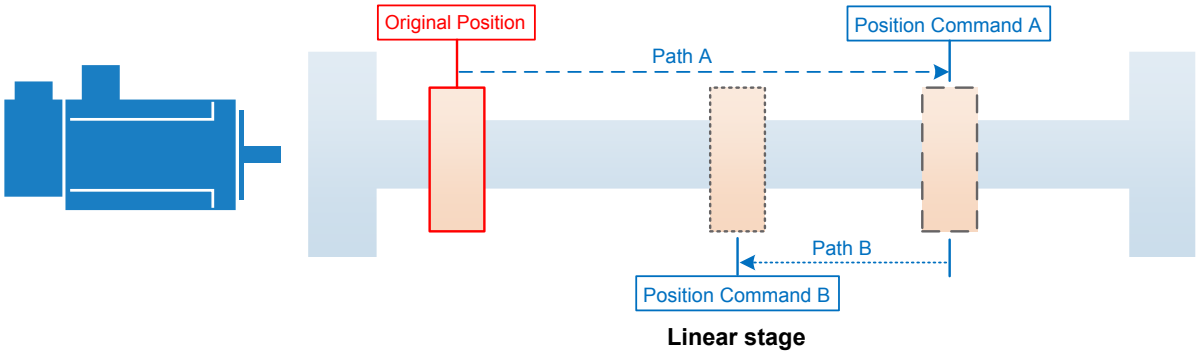

Single-point Positioning

Positions the motor at a specific point (within a single rotation) for precise stop upon request

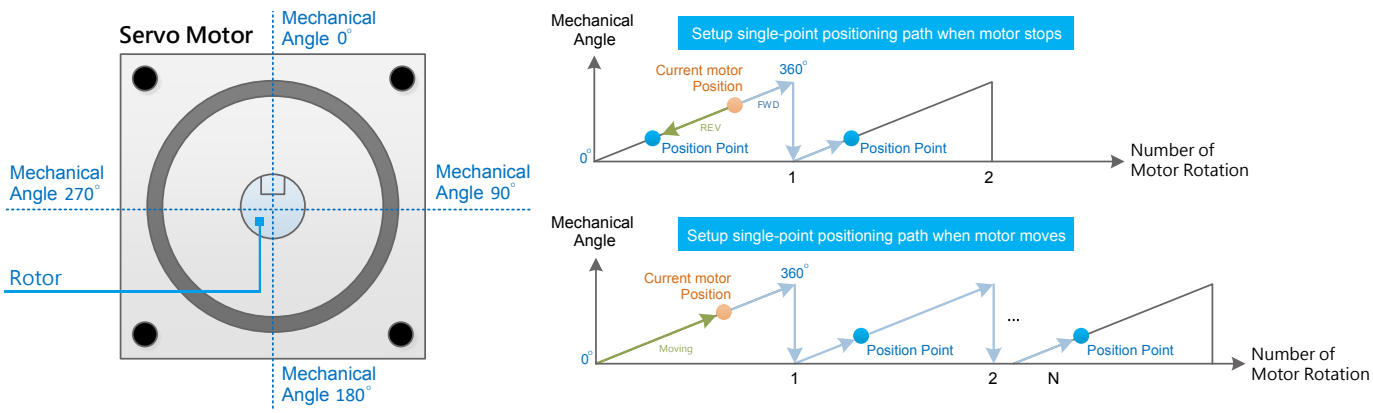

A Drive for Permanent Magnet (PM) Motors

The C2000 is a dual mode drive to control both an induction motor and permanent magnet motor. The dynamic response of a PM motor provides precise control of position, speed and torque

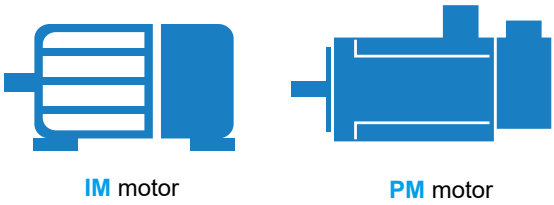

High-Performance Field-oriented Control

The FOC+PG mode of C2000 Series can output 150% of starting torque at extremely low speeds for precise and stable speed control.

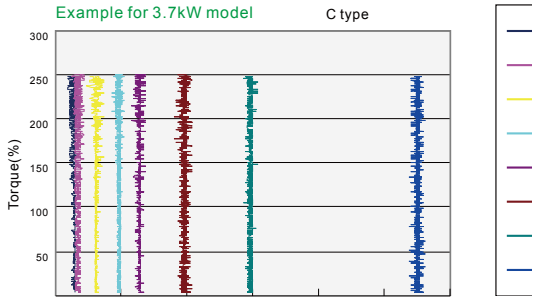

Fast Response to Impact Load

During load changes, the C2000 Series calculates the required torque response and minimizes the vibration caused by load impact using FOC

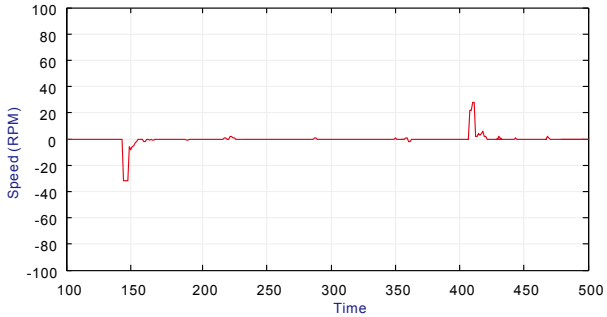

Auto Energy-Saving Operation

Auto-calculates the optimal voltage for the load output using load power when under constant speed operation

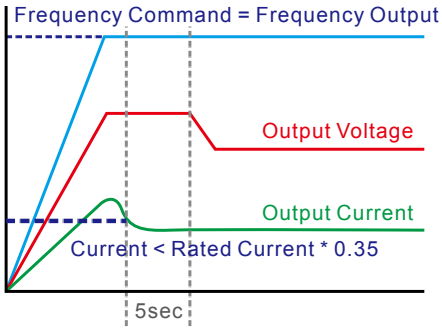

Deceleration Energy Backup (DEB)

This function controls the motor deceleration to stop when power blinks off to prevent mechanical damage and then accelerates to its original operation speed when power resumes

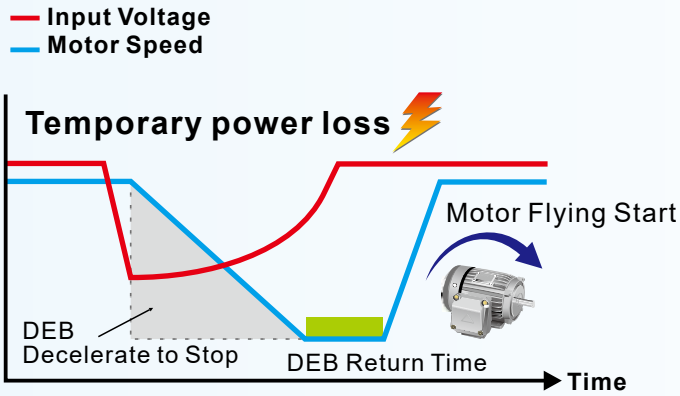

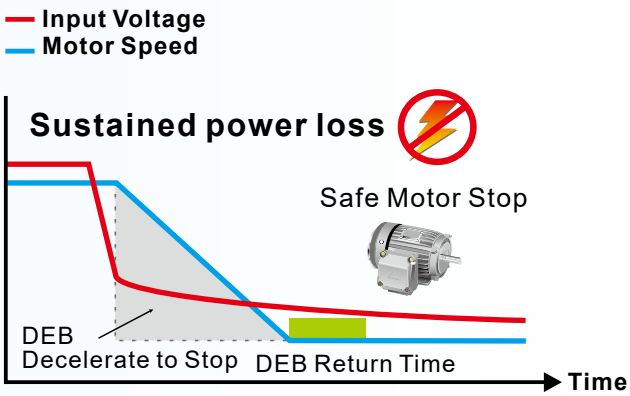

Modular Design

Various accessories options, such as I/O extension cards, encoder feedback cards, communication cards, hot pluggable LCD keypad, removable terminals and removable fans

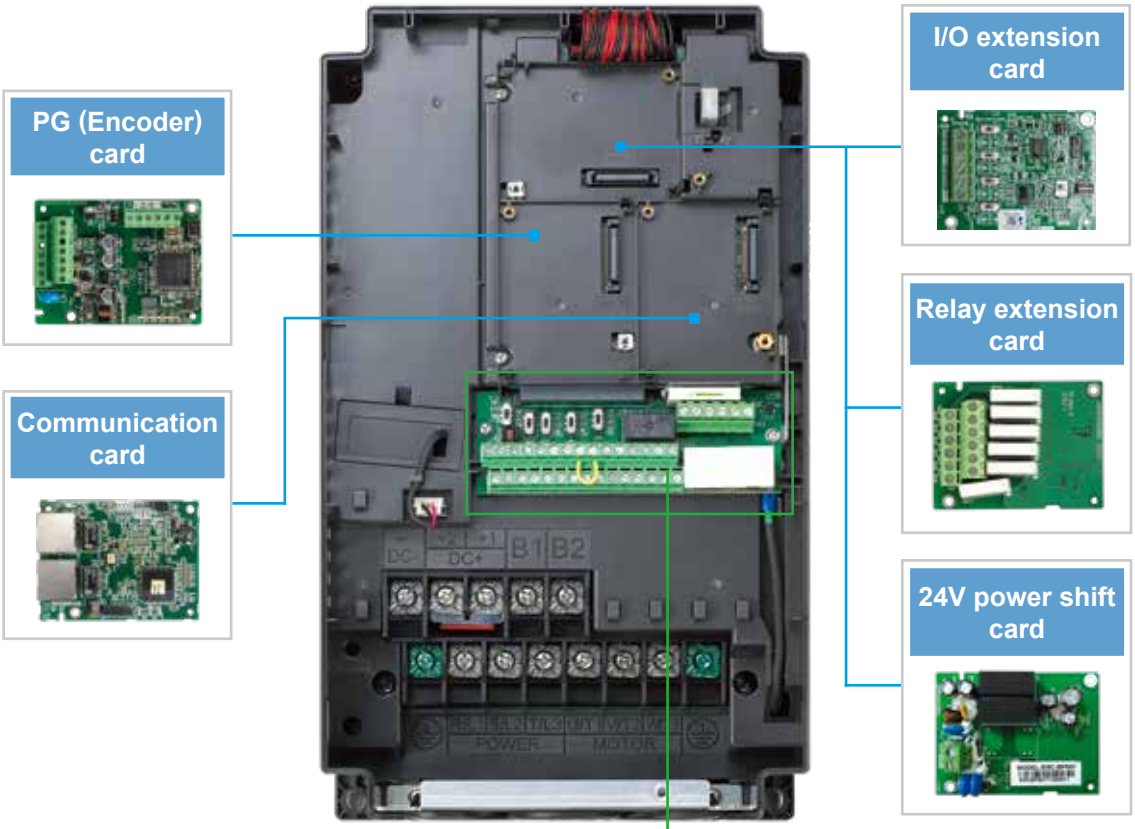

*NOTE: "▶" are optional accessories.

■ Removable terminals

Convenient wiring and safety equipment.

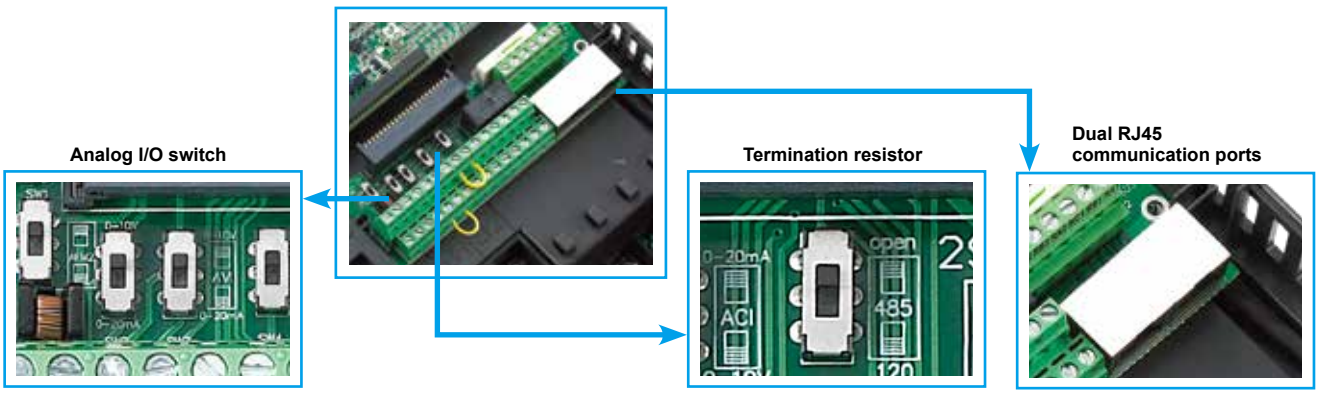

The modular design fulfills the needs of system applications and equipment maintenance

- KPC-CC01 keypad
- Standard RJ45 network cable for remote operation.
- Easy to remove with one press.

- The product nameplate shows the input/output voltage, input/output current, the frequency range, and more.

- Remove the safety screws and press on both side tabs to remove the cover.

- Modular fan design, easy to replace and clean, extending product service life.

- RFI Jumper

Excellent Environment Adaptability

- Built-in DC choke to surpress harmonics*
- Built-in EMC filter to filter noise*
- Conformal coating (Class 3C3 of IEC60721-3-3 standard) ensures drive operation stability and safety in critical environments.
- The electronic components of the drive are isolated from the cooling system to reduce heat interference. Dissipated heat can be discharged by flange-mounting installation, and forced fan cooling can import cold air into the heat sink. The heat dissipation performance is optimized by these two cooling methods.

*Note: Please refer to the Product Specification

Certifications

UL, cUL	**CE** Low Voltage: EN61800-5-1 EMC: EN61000-3-12, EN61800-3, IEC61000-6-2, IEC61000-6-4, IEC61000-4-2, IEC61000-4-3, IEC61000-4-4, IEC61000-4-5, IEC61000-4-6, IEC61000-4-8
C-Tick	
ROHS	

High-Speed Networking

- Provides various fieldbus cards for flexible applications
- Advanced network functions
- Built-in Modbus communication

PROFIBUS DP / PROFINET / DeviceNet / Modbus TCP / EtherNet/IP / EtherCAT / CANopen

■ CANopen (DS402)

Ability to control up to 8 Slave drives via the CANopen Master function

- Supports all Delta industrial automation products (Built-in EDS files for all Delta industrial automation products)
- I/O data configurations for each device on the CANopen network
- Motion control planning function
- WPL Soft

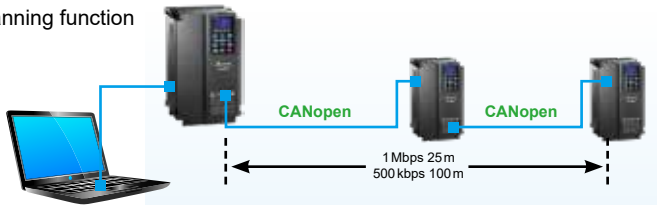

- TAP-CN03 distribution box for long distances

- RJ45 cable

■ DeviceNet

Through the Delta specially designed DeviceNet Builder software, users can easily establish a standard DeviceNet control network by the parameter pre-assignment function for each equipment and remote I/O

- Supports all Delta industrial automation products (Built-in EDS files for all Delta industrial automation products)
- I/O data configurations for each device on the DeviceNet network
- DeviceNet layout software

■ EtherNet/IP

■ Modbus TCP

Delta provides communication integrator software that offers graphic module settings and a user friendly interface to support all Ethernet products settings and online monitoring

- Delta software for Ethernet/Modbus TCP products
- Graphic module settings and a user friendly interface
- Auto search function
- Supports Virtual COM settings

Convenient Drive System Management Platform

■ Provides a complete operation platform for users' easy control and monitoring via PC, including parameters save/setting, real-time wave monitor, quick setup, for multiple languages and with multi-language operation systems

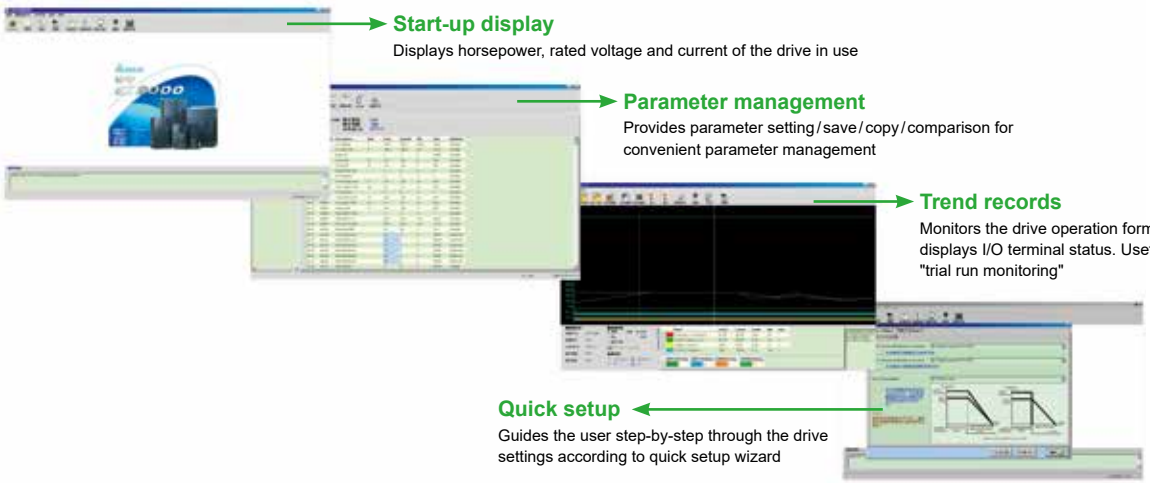

Start-up display
Displays horsepower, rated voltage and current of the drive in use

Parameter management
Provides parameter setting/save/copy/comparison for convenient parameter management

Trend records
Monitors the drive operation form via network and displays I/O terminal status. Useful for tasks such as "trial run monitoring"

Quick setup
Guides the user step-by-step through the drive settings according to quick setup wizard

*Note: These software programs are available for download on Delta's website

Examples for Different Loads

Rated Load	Light Duty (LD) / Normal Load (ND)	Heavy Duty (HD)	Super Heavy Duty (SHD)
Parameters	Parameter 00-16 =2 (LD) or 0 (ND)	Parameter 00-16 = 0	Parameter 00-16 = 1
Overload Capacity	120% / 60 secs., 160% / 3 secs.	150% / 60 secs., 180% / 3 secs.	150% / 60 secs., 200% / 3 secs.

Applications

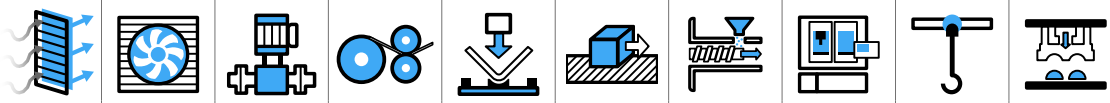

HVAC | Fan | Pump | Milling Machine | Bending Machine | Conveyor System | Extruding Machine | Machine Tool | Crane / Hoist | Pressing Machine

Carrier Wave Frequency

Parameter 00-17 for adjustment

Carrier Wave Frequency	Electrical Noise	Noise & Leakage Current	Heat Dissipation	Current Waveform
2 kHz | 15 kHz	Loud | Low	Low | Loud Noise / Large Current	Low | High	

Model Name

VFD 007 C 43 A - 2 1

NEMA Protection Level
- **0** UL Open Type
- **1** NEMA 1

IP Protection Level
- **0** IP00
- **2** IP20

Version
- **A B S** Wall mount
- **C** Floor mount

Input Voltage
- **23** 230 V 3-Phase
- **43** 460 V 3-Phase
- **4E** 460 V 3-Phase Bult-in EMI
- **53** 575 V 3-Phase
- **63** 690 V 3-Phase

Product Series
- **C** C2000

Applicable Motor Capacity

007: 1 HP (0.75 kW) ~ 6300: 850 HP (630 kW)

* Refer to product specification for detailed information

Series Name

Variable Frequency Drive

Product Specifications

230 VAC, 3Ø, Motor Power Range 0.75~90 kW for Heavy Duty Applications											
Frame	Model Name	Output						Input		Power Supply	
	VFD_ _ _C23A -00 / -21	Heavy Duty (HD) *1			Super Heavy Duty (SHD)			Heavy Duty (HD)	Super Heavy Duty (SHD)	Heavy Duty (HD)	Super Heavy Duty (SHD)
		Motor Power Range (kW)	Motor Power Range (HP)	Rated Output Current (A) *4	Motor Power Range (kW)	Motor Power Range (HP)	Rated Output Current (A) *4	Rated Input Current (A) *2	Rated Input Current (A)	Power Supply Capacity (kVA) *3	Power Supply Capacity (kVA)
A	007	0.75	1	5	0.4	0.5	3	6.4	3.9	2.7	1.6
	015	1.5	2	8	0.75	1	5	12	6.4	5.0	2.7
	022	2.2	3	11	1.5	2	8	16	12	6.7	5.0
	037	3.7	5	17	2.2	3	11	20	16	8.3	6.7
B	055	5.5	7.5	25	3.7	5	17	28	20	11.6	8.3
	075	7.5	10	33	5.5	7.5	25	36	28	15.0	11.6
	110	11	15	49	7.5	10	33	52	36	21.6	15.0
C	150	15	20	65	11	15	49	72	52	29.9	21.6
	185	18.5	25	75	15	20	65	83	72	34.5	29.9
	220	22	30	90	18.5	25	75	99	83	41.2	34.5
D	300	30	40	120	22	30	90	124	99	51.5	41.2
	370	37	50	146	30	40	120	143	124	59.4	51.5
E	450	45	60	180	37	50	146	171	143	71.1	59.4
	550	55	75	215	45	60	180	206	171	85.6	71.1
	750	75	100	255	55	75	215	245	206	101.8	85.6
F	900	90	125	346	75	100	255	331	245	137.6	101.8

Heavy Duty (HD)	At 150% of the rated output current, continuous operation lasts up to 1 min. in every 5 mins. At 180% of the rated output current, continuous operation lasts up to 3 secs. in every 30 secs.
Super Heavy Duty (SHD)	At 150% of the rated output current, continuous operation lasts up to 1 min. in every 5 mins. At 200% of the rated output current, continuous operation lasts up to 3 secs. in every 30 secs.
Rated Input Voltage	3Ø, 200 ~ 240 VAC (-15%~+10%)
Rated Input Frequency	50/60 Hz
Permissible Power Frequency Variation	±5% (47~63 Hz)
Displacement Power Factor (cosϕ)	> 0.98
Carrier Wave Frequency *5	Please see Note 5 below
Efficiency	97.8% (Frames A, B, C, D); 98.2% (Frames E, F)
Cooling Method	Forced air-cooling (The model 007 is for natural cooling)
Braking Chopper	Built-in for frames A, B, C; optional for frames D, E, F
DC Reactor	Optional for frames A, B, C; built-in for frames D, E, F
EMC Filter	Optional for all frames
EMC-COP01	Optional for all frames

Notes:
1. Factory rated load (parameter 00-16) is heavy duty by default.
2. Rated input current may vary with the power supply impedance, power adapter, input impedance, DC reactor and the actual loading.
3. Power supply capacity is calculated based on the rated input current and 240 VAC to select an electrical transformer capacity.
4. For applications at high altitude, high ambient temperature, or with high carrier wave and advanced motor vector control. Refer to the user manual for corresponding derating curves.
5. Refer to the user manual for the default carrier wave frequency, adjustable range and derating curves.

460VAC, 3Ø, Motor Power Range 0.7 ~ 560 kW for Heavy Duty Applications

Frame	Model Name	Output						Input		Power Supply	
		Heavy Duty (HD) *1			Super Heavy Duty (SHD)			Heavy Duty (HD)	Super Heavy Duty (SHD)	Heavy Duty (HD)	Super Heavy Duty (SHD)
	VFD_ _ _C4_ -00 / -21	Motor Power Range (kW)	Motor Power Range (HP)	Rated Output Current (A) *5	Motor Power Range (kW)	Motor Power Range (HP)	Rated Output Current (A) *5	Rated Input Current (A) *2	Rated Input Current (A)	Power Supply Capacity (kVA) *3	Power Supply Capacity (kVA)
A	007	0.75	1	3	0.4	0.5	1.7	4.3	3.5	3.6	2.9
	015	1.5	2	4	0.75	1	3	5.9	4.3	4.9	3.6
	022	2.2	3	6	1.5	2	4	8.7	5.9	7.2	4.9
	037	3.7	5	9	2.2	3	6	14	8.7	11.6	7.2
	040	4.0	5	10.5	3.7	5	9	15.5	14	12.9	11.6
	055	5.5	7.5	12	4.0	5	10.5	17	15.5	14.1	12.9
B	075	7.5	10	18	5.5	7.5	12	20	17	16.6	14.1
	110	11	15	24	7.5	10	18	26	20	21.6	16.6
	150	15	20	32	11	15	24	35	26	29.1	21.6
C	185	18.5	25	38	15	20	32	40	35	33.3	29.1
	220	22	30	45	18.5	25	38	47	40	39.1	33.3
	300	30	40	60	22	30	45	63	47	52.4	39.1
D0	370	37	50	73	30	40	60	74	63	61.5	52.4
	450	45	60	91	37	50	73	101	74	84.0	61.5
D	550	55	75	110	45	60	91	114	101	94.8	84.0
	750	75	100	150	55	75	110	157	114	130.5	94.8
E	900	90	125	180	75	100	150	167	157	138.8	130.5
	1100	110	150	220	90	125	180	207	167	172.1	138.8
F	1320	132	175	260	110	150	220	240	207	199.5	172.1
	1600	160	215	310	132	175	260	300	240	249.4	199.5
G	1850	185	250	370	160	215	310	380	300	315.9	249.4
	2000 *4	200	270	395	160	215	310	395	300	328.4	249.4
	2200	220	300	460	185	250	370	400	380	332.5	315.9
	2500 *4	250	340	481	200	270	395	447	390	371.6	324.2
H	2800	280	375	550	220	300	460	494	400	410.7	332.5
	3150	315	420	616	280	375	550	555	494	461.4	410.7
	3550	355	475	683	315	425	616	625	555	519.6	461.4
	4000 *4	400	530	770	355	475	683	770	590	640.1	490.5
	4500	450	600	866	355	475	683	866	625	720.0	519.6
	5000	500	675	930	450	600	866	930	866	773.2	720.0
	5600	560	750	1094	500	675	930	1094	930	909.5	773.2

Heavy Duty (HD)	At 150% of the rated output current, continuous operation lasts up to 1 min. in every 5 mins. At 180% of the rated output current, continuous operation lasts up to 3 secs. in every 30 secs.
Super Heavy Duty (SHD)	At 150% of the rated output current, continuous operation lasts up to 1 min. in every 5 mins. At 200% of the rated output current, continuous operation lasts up to 3 secs. in every 30 secs.
Rated Input Voltage	3Ø, 380 ~ 480 VAC (-15% ~ +10%)
Rated Input Frequency	50 / 60 Hz
Permissible Power Frequency Variation	±5% (47 ~ 63 Hz)
Displacement Power Factor (cosϕ)	> 0.98
Carrier Wave Frequency *6	Please see Note 6 below
Efficiency	97.8% (Frames A, B, C, D0, D); 98.2% (Frames E, F, G, H)
Cooling Method	Forced air-cooling (The models 007 and 015 are for natural cooling)
Braking Chopper	Built-in for frames A, B, C; optional for frames D0, D, E, F, G, H
DC Reactor	Optional for frames A, B, C; built-in for frames D0, D, E, F, G, H
EMC Filter	Built-in for VFDxxxC4EA-21 frames A, B, C; optional for other frames
EMC-COP01	Built-in for VFDxxxC4EA-21 frames A, B, C and VFDxxxC43A-21 frames D0, D, E, F, G, H; optional for other frames

Notes:
1. Factory rated load (parameter 00-16) is heavy duty by default.
2. Rated input current may vary with the power supply impedance, power adapter, input impedance, DC reactor and the actual loading.
3. Power supply capacity is calculated based on the rated input current and 480 VAC to select an electrical transformer capacity.
4. The model is market ready. Please contact us if you need it. For SHD models, please note the rated output current value.
5. For applications at high altitude, high ambient temperature, or with high carrier wave and advanced motor vector control. Refer to the user manual for corresponding derating curves.
6. Refer to the user manual for the default carrier wave frequency, adjustable range and derating curves.

Product Specifications

575VAC, 3Ø, Motor Power Range 1.5~15 kW (2~20 HP) for Light Duty Applications

Frame	Model Name	Output									Input			Power Supply		
		Light Duty (LD) *1			Normal Duty (ND)			Heavy Duty (HD)			Light Duty (LD)	Normal Duty (ND)	Heavy Duty (HD)	Light Duty (LD)	Normal Duty (ND)	Heavy Duty (HD)
	VFD-_ _ _C53A -21	Motor Power Range (kW)	Motor Power Range (HP)	Rated Output Current (A) *4	Motor Power Range (kW)	Motor Power Range (HP)	Rated Output Current (A) *4	Motor Power Range (kW)	Motor Power Range (HP)	Rated Output Current (A) *4	Rated Input Current (A) *2	Rated Input Current (A)	Rated Input Current (A)	Power Supply Capacity (kVA) *3	Power Supply Capacity (kVA)	Power Supply Capacity (kVA)
A	015	1.5	2	3	0.75	1	2.5	0.75	1	2.1	3.8	3.1	2.6	3.9	3.2	2.7
	022	2.2	3	4.3	1.5	2	3.6	1.5	2	3	5.4	4.5	3.8	5.6	4.7	3.9
	037	3.7	5	6.7	2.2	3	5.5	2.2	3	4.6	10.4	7.2	5.8	10.8	7.5	6.0
B	055	5.5	7.5	9.9	3.7	5	8.2	3.7	5	6.9	14.9	12.3	10.7	15.5	12.8	11.1
	075	7.5	10	12.1	5.5	7.5	10	3.7	5	8.3	16.9	15	12.5	17.6	15.6	13.0
	110	11	15	18.7	7.5	10	15.5	7.5	10	13	21.3	18	16.9	22.1	18.7	17.6
	150	15	20	24.2	11	15	20	7.5	10	16.8	26.3	22.8	19.7	27.3	23.7	20.5

Light Duty (LD)	At 120% of the rated output current, continuous operation lasts up to 1 min. in every 5 mins.
Normal Duty (ND)	At 120% of the rated output current, continuous operation lasts up to 1 min. in every 5 mins. At 160% of the rated output current, continuous operation lasts up to 3 secs. in every 30 secs.
Heavy Duty (HD)	At 150% of the rated output current, continuous operation lasts up to 1 min. in every 5 mins. At 180% of the rated output current, continuous operation lasts up to 3 secs. in every 30 secs.
Rated Input Voltage	3Ø, 525~600 VAC (-15%~+10%)
Rated Input Frequency	50/60 Hz
Permissible Power Frequency Variation	±5% (47~63 Hz)
Displacement Power Factor (cosϕ)	> 0.98
Carrier Wave Frequency *5	Please see Note 5 below
Efficiency	97% (Frame A); 98% (Frame B)
Cooling Method	Forced air-cooling (The model 015, 022 are for natural cooling)
Braking Chopper	Built-in
DC Reactor	Optional purchase
EMC Filter	Optional purchase
EMC-COP01	Optional purchase

Notes:
1. Factory rated load (parameter 00-16) is light duty by default.
2. Rated input current may vary with the power supply impedance, power adapter, input impedance, DC reactor and the actual loading.
3. Power supply capacity is calculated based on the rated input current and 600 VAC to select an electrical transformer capacity.
4. For applications at high altitude, high ambient temperature, or with high carrier wave and advanced motor vector control. Refer to the user manual for corresponding derating curves.
5. Refer to the user manual for the default carrier wave frequency, adjustable range and derating curves.

690VAC, 3Ø, Motor Power Range 18.5~630 kW (25~850 HP) for Light Duty Applications

Frame	Model Name	Output									Input			Power Supply		
		Light Duty (LD) *1			Normal Duty (ND)			Heavy Duty (HD)			Light Duty (LD)	Normal Duty (ND)	Heavy Duty (HD)	Light Duty (LD)	Normal Duty (ND)	Heavy Duty (HD)
	VFD-_ _ _C63B -00 / -21	Motor Power Range	Motor Power Range (HP) *4	Rated Output Current (A) *5	Motor Power Range	Motor Power Range (HP) *4	Rated Output Current (A) *5	Motor Power Range	Motor Power Range (HP) *4	Rated Output Current (A) *5	Rated Input Current (A) *2	Rated Input Current (A)	Rated Input Current (A)	Power Supply Capacity (kVA) *註 3	Power Supply Capacity (kVA)	Power Supply Capacity (kVA)
C	**185**	18.5	25 (20)	24	15	20 (15)	20	11	15 (10)	14	29	24	20	34.7	28.7	23.9
	220	22	30 (25)	30	18.5	25 (20)	24	15	20 (15)	20	36	29	24	43.0	34.7	28.7
	300	30	40 (30)	36	22	30 (25)	30	18.5	25 (20)	24	43	36	29	51.4	43.0	34.7
	370	37	50 (40)	45	30	40 (30)	36	22	30 (25)	30	54	43	36	64.5	51.4	43.0
D	**450**	45	60 (50)	54	37	50 (40)	45	30	40 (30)	36	65	54	43	77.7	64.5	51.4
	550	55	75 (60)	67	45	60 (50)	54	37	50 (40)	45	81	65	54	96.8	77.7	64.5
E	**750**	75	100 (75)	86	55	75 (60)	67	45	60 (50)	54	84	66	53	100.4	78.9	63.3
	900	90	125 (100)	104	75	100 (75)	86	55	75 (60)	67	102	84	66	121.9	100.4	78.9
	1100	110	150 (125)	125	90	125 (100)	104	75	100 (75)	86	122	102	84	145.8	121.9	100.4
	1320	132	175 (150)	150	110	150 (125)	125	90	125 (100)	104	147	122	102	175.7	145.8	121.9
F	**1600**	160	215 (175)	180	132	175 (150)	150	110	150 (125)	125	178	148	123	212.7	176.9	147.0
	2000	200	270 (200)	220	160	215 (175)	180	132	175 (150)	150	217	178	148	259.3	212.7	176.9
G	**2500**	250	335 (250)	290	200	270 (200)	220	160	215 (175)	180	292	222	181	349.0	265.3	216.3
	3150	315	425 (350)	350	250	335 (250)	290	200	270 (200)	220	353	292	222	421.9	349.0	265.3
H	**4000**	400	530 (400)	430	315	425 (350)	350	250	335 (250)	290	454	353	292	542.6	421.9	349.0
	4500	450	600 (450)	465	355	475 (400)	385	280	375 (335)	310	469	388	313	560.5	463.7	374.1
	5600	560	750 (500)	590	450	600 (450)	465	400	530 (450)	420	595	504	423	711.1	602.3	505.5
	6300	630	850 (750)	675	630	850 (750)	675	630	850 (750)	675	681	681	681	813.8	813.8	813.8

Light Duty (LD)	At 120% of the rated output current, continuous operation lasts up to 1 min. in every 5 mins.
Normal Duty (ND)	At 120% of the rated output current, continuous operation lasts up to 1 min. in every 5 mins. At 160% of the rated output current, continuous operation lasts up to 3 secs. in every 30 secs.
Heavy Duty (HD)	At 150% of the rated output current, continuous operation lasts up to 1 min. in every 5 mins. At 180% of the rated output current, continuous operation lasts up to 3 secs. in every 30 secs.
Rated Input Voltage	3Ø, 525~690 VAC (-15%~+10%)
Rated Input Frequency	50/60 Hz
Permissible Power Frequency Variation	±5% (47~63 Hz)
Displacement Power Factor (cosϕ)	> 0.98
Carrier Wave Frequency *6	Please see Note 6 below
Efficiency	97% (Frames C, D, E, F); 98% (Frames G, H)
Cooling Method	Forced air-cooling
Braking Chopper	Built-in for frame C; optional for frames D, E, F, G, H
DC Reactor	Optional for frame C; Built-in for frames D, E, F, G, H
EMC Filter	Optional purchase
EMC-COP01	Optional purchase

Notes:
1. Factory rated load (parameter 00-16) is light duty by default.
2. Rated input current may vary with the power supply impedance, power adapter, input impedance, DC reactor and the actual loading.
3. Power supply capacity is calculated based on the rated input current and 690VAC to select an electrical transformer capacity.
4. Values in parentheses are the motor power values (HP) for the mains electricity voltage 575 VAC.
5. For applications at high altitude, high ambient temperature, or with high carrier wave and advanced motor vector control. Refer to the user manual for corresponding derating curves.
6. Refer to the user manual for the default carrier wave frequency, adjustable range and derating curves.

General Specifications

	Item	Specifications
Control Characteristics	Control Mode [*1]	**230VAC / 460VAC models:** Available modes below via parameter settings • IMVF (Induction Motor V/F control) • IMVF + PG (Induction Motor, V/F control with encoder) • IM/PM SVC (Inductor Motor / Permanent-magnet Synchronous Motor, space vector control) • IMFOC + PG (Induction Motor, field-oriented control with encoder) • PMFOC + PG (Permanent-magnet Synchronous Motor, field-oriented control with encoder) • IMFOC Sensorless (Induction Motor, sensorless field-oriented control) • PM Sensorless (Permanent-magnet Synchronous Motor, sensorless field-oriented control) • IPM Sensorless (Interior Permanent Synchronous Motor, sensorless vector control) • SynRM Sensorless (Synchronous Reluctance Motor, sensorless field-oriented control) • IM TQCPG (Induction Motor, torque control with encorder) • PM TQCPG (Permanent-magnet Synchronous Motor, torque control with encoder) • IM TQC Sensorless (Induction Motor, sensorless torque control) • SynRM TQC Sensorless (Synchronous Reluctance Motor, sensorless torque control)
		575VAC / 690VAC models: Available modes below via parameter settings • IM V/F (Induction Motor, V/F control) • IMVF + PG (Induction Motor, V/F control with encoder) • IM/PM SVC (Induction Motor / Permanent-magnet Synchronous Motor, space vector control)
	Max. Output Frequency [*2]	0 ~ 599 Hz
	Frequency Output Accuracy	Digital command: ±0.01%, -10˚C ~ +40˚C; Analog command: ±0.1%, 25±10˚C
	Output Frequency Resolution (Input Frequency Resolution)	Digital command: 0.01 Hz, Analog command: 0.05 * max. output frequency (Parameter 01-00), 11 bit plus sign
	Speed Control Range (Speed Control Ratio) [*3]	• IMVF, IMVF + PG, IMSVC: 1:50 • IMFOC Sensorless: 1:100 • IMFOC + PG: 1:1000 • PMSVC: 1:20 • PM Sensorless: 1:50 • IPM Sensorless: 1:100 • PMFOC + PG: 1:1000
	Starting Torque	• IMVF, IMVF+PG, IMSVC: 150% / 3 Hz • IMFOC Sensorless: 200% / 0.5 Hz • IMFOC + PG: 200% / 0 Hz • PMSVC: 100% / (motor rated frequency / 20) • PM Sensorless: 100% / (motor rated frequency / 50) • IPM Sensorless: 100% / 0 Hz • PMFOC + PG: 200% / 0 Hz
	Torque Accuracy [*4]	TQC + PG: ±5% ; TQC Sensorless: ±15%
	Torque Limit	**230 VAC / 460 VAC models:** Heavy Duty: up to 180% torque current; Super Heavy Duty: up to 220% torque current **575 VAC / 690 VAC models:** Up to 200% torque current
Protection Characteristics	Out Over-current Protection	**230 VAC / 460 VAC models:** Over-current protection for 240% of rated current (Heavy duty) **575 VAC / 690 VAC models:** Over-current protection for 240% of rated current (Normal duty) When the over-current protection function is triggered, the C2000 Plus will stop and send out error codes.
	Output Current Clamp	**230 VAC / 460 VAC models:** Heavy duty / Super heavy duty: 190 ~ 195% rated current **575 VAC / 690 VAC models: (except 6300 models)** Light duty: 125 ~ 145% rated current; Normal duty: 170 ~ 175% rated current; Heavy duty: 200 ~ 250% rated current **VFD6300C63B-00/21:** Light duty / Normal duty / Heavy duty: 170 ~ 175% rated current The C2000 Plus will recover automatically and the current clamp will be disabled when output current resumes.
	Over-voltage (DC) Protection	**The C2000 Plus will shut down under below conditions:** **230 VAC models:** DC bus over 410 V; **460 VAC models:** DC bus over 820 V; **575 VAC / 690 VAC models:** DC bus over 1189 V
	Grounding Leakage Current Protection [*5]	The leakage current is 60% higher than the rated current
	Output Low / Under Current Fault [*5]	Low current detection in open circuits
	Short-circuit Current Rating (SCCR)	Per UL508C, the C2000 Plus with a fuse is suitable for power systems with less than 100kA short-circuit capacity
	Motor Overheat Protection [*5]	Supports electronic thermal relay protection, PTC, KTY84-130 and PT100
	Drive Overheat Protection	Built-in temperature sensor (IGBT refer to oH1, Heatsink refer to oH2)
	Fan Control	**230 VAC models:** VFD150C2xx-xx: PMW control; VFD110C2xx-xx and below: On / Off switch control **460 VAC models:** VFD185C4xx-xx: PMW control; VFD150C4xx-xx and below: On / Off switch control **575 VAC / 690 VAC models:** PWM control
Certification		**CE** (Low Voltage Directive 2014/35/EU, EN61800-5-1; EMC Directive 2014/35/EU, EN61800-3) **UL**508C, **cUL** CAN / CSA C22.2 No.14-13 · No.274[*6], **Plenum rated** **RCM** · **KC**[*7], **EAC**[*7], **SEMI F47**-0706, **GB12668.3** **WEEE** 2012/19/EU, **RoHS** 2011/95/EU[*8] **ISO 9001** (Quality assurance system) **ISO 14001** (Environmental system)
Safety Standards		Safe Torque Off (STO, EN/IEC61800-5-2) TUV Rheinland Certified IEC62061/IEC61508, SIL CL2 EN ISO13849-1, Cat.3/PL d

Note:
1. 230 VAC / 460 VAC models: Synchronous reluctance control mode is supported for the firmware V3.06 or later.
   575 VAC / 690 VAC models: Magnetic vector control mode is supported for the firmware V2.06 or later.
2. The max. output frequency will vary with carrier waves and control modes. Refer to the parameters 01-00 and 06-55 in the user manual for details.
3. The rated speed control ratio is for heavy duty applications. The speed control varies with the environment, applications, motor types or encoders.
4. In the torque control mode.
5. Adjust protection levels by parameter settings.
6. No UL certification for VFD4500C43x-xx, VFD5000C43x-xx, VFD5600C43x-xx models.
7. For 230 VAC / 460 VAC models only
8. Obtaining the certificate of RoHS 2015/863/EU compliance

Operation Temperature & Protection Level

Model	Frame	Top Cover	Conduit Box	Protection Level	Operation Temperature
VFDxxxCxxx-21	Frame A~C 230V: 0.75~22kW 460V: 0.75~30kW 575V: 1.5~15kW 690V: 18.5~37kW	Remove top cover	Standard conduit plate	IP20/UL Open Type	-10°C~50°C
		Standard with top cover		IP20/UL Type1 / NEMA1	-10°C~40°C
VFDxxxCxxx-21	Frame D0~H 230V: 22kW and above 460V: 37kW and above 690V: 45kW and above	N / A	Standard conduit box	IP20/UL Type1 / NEMA1	-10°C~40°C
VFDxxxCxxx-00	Frame D0~H 230V: 22kW and above 460V: 37kW and above 690V: 45kW and above	N / A	No conduit box	 Degrees of protection: IP20 / IP00 for the circled area	-10°C~50°C

Operating Environment, Storage & Transportation

DO NOT expose the AC motor drive to harsh environments, such as dust, direct sunlight, corrosive/flammable gasses, humidity, liquid or vibrations. The salts in the air must be less than 0.01 mg/cm² per year.			
Environment	**Installation Location**	IEC60364-1/IEC60664-1 Pollution degree 2, indoor use only	
	Surrounding Temperature (°C)	Storage/Transportation	-25 ~ 70
		Only allowed in non-condensation, non-frost, non-conductive environment	
	Rated Humidity	Operation/Storage/Transportation	Max. 95%
		Only allowed in non-condensation, non-frost, non-conductive environment	
	Air Pressure (kPa)	Operation/Storage	86 ~ 106
		Transportation	70 ~ 106
	Pollution Level	IEC60721-3-3	
		Operation	Class 3C3; Class 3S2
		Storage	Class 1C2; Class 1S2
		Transportation	Class 2C2; Class 2S2
		If the AC motor drive is to be used under harsh environment with high level of contamination (e.g. dew, water, dust), make sure it is installed in an environment qualified for IP54 such as in a cabinet	
	Altitude	Operation	If the AC motor drive is installed at an altitude 0 ~ 1000m, follow normal operation restriction. If it is installed at altitude 1000 ~ 2000m, decrease 1% of rated current or lower 0.5°C of temperature for every 100m increase in altitude. Maximum altitude for Corner Grounded TN system is 2000m, for application over 2000m please contact Delta for more details
Package Drop		Storage/Transportation	ISTA procedure 1A (according to weight) IEC60068-2-31
Vibration		1.0mm, peak to peak value range from 2Hz to 13.2Hz; 0.7G~1.0G range from 13.2Hz to 55Hz; 1.0G range from 55Hz to 512Hz. Comply with IEC 60068-2-6.	
Impact		IEC/EN 60068-2-27	
Operation Position		Max. allowed offset angle ±10° (under normal installation position)	

Dimensions

Digital Keypad Unit: mm [inch]

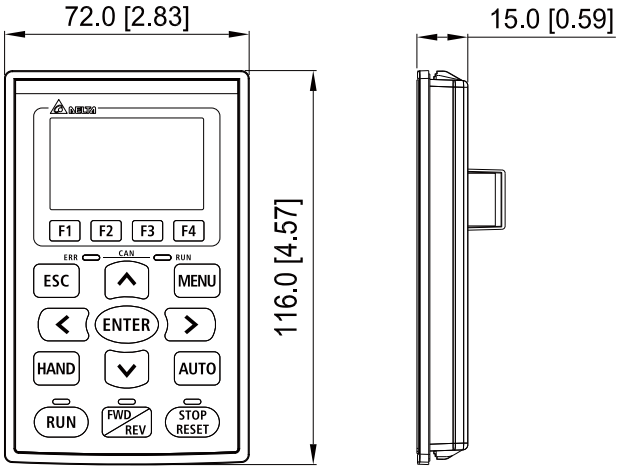

KPC-CC01

Standard LCD keypad

Frame A

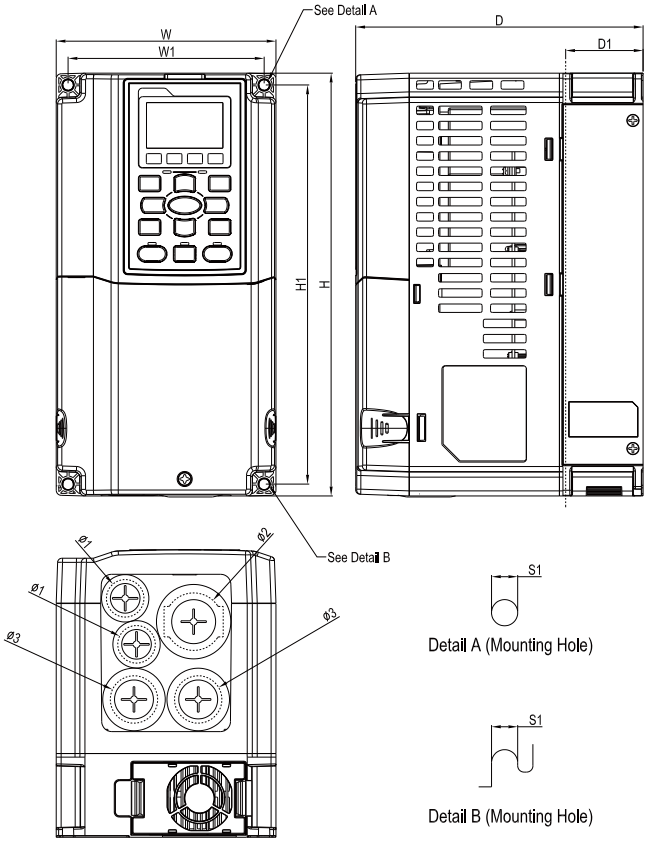

Model	
VFD007C23A-21	VFD007C4EA-21
VFD015C23A-21	VFD015C4EA-21
VFD022C23A-21	VFD022C4EA-21
VFD037C23A-21	VFD037C4EA-21
VFD007C43A-21	VFD040C4EA-21
VFD015C43A-21	VFD055C4EA-21
VFD022C43A-21	VFD015C53A-21
VFD037C43A-21	VFD022C53A-21
VFD040C43A-21	VFD037C53A-21
VFD055C43A-21	

Weight

230 V_{AC} Models: 2.6 ± 0.3 Kg
460 V_{AC} Models: 2.6 ± 0.3 Kg
575 V_{AC} Models: 3 ± 0.3 Kg

Frame		W	H	D	W1	H1	D1*	Ø	Ø1	Ø2	Ø3
A	mm	130.0	250.0	170.0	116.0	236.0	45.8	6.2	22.2	34.0	28.0
	inch	5.12	9.84	6.69	4.57	9.29	1.80	0.24	0.87	1.34	1.10

*D1: Flange mount.

Frame B

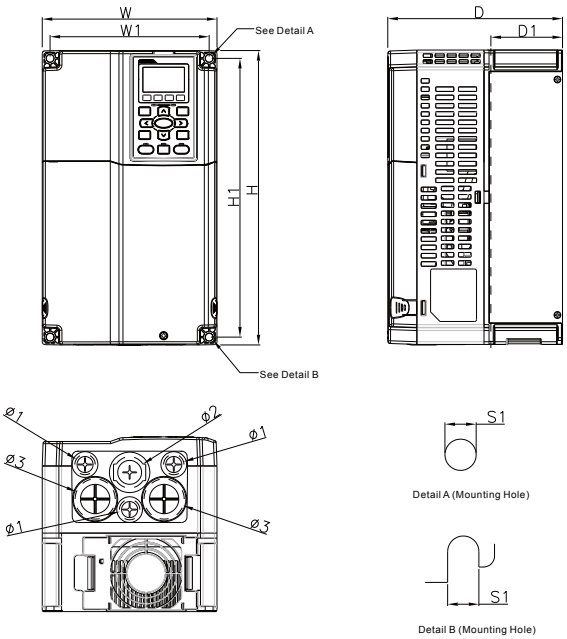

Model	
VFD055C23A-21	VFD055C53A-21
VFD075C23A-21	VFD075C53A-21
VFD110C23A-21	VFD110C53A-21
VFD075C43A-21	VFD150C53A-21
VFD110C43A-21	
VFD150C43A-21	
VFD075C4EA-21	
VFD110C4EA-21	
VFD150C4EA-21	

Weight

230 V_{AC} Models: 5.4 ± 1 Kg
460 V_{AC} Models: 5.4 ± 1 Kg
575 V_{AC} Models: 4.8 ± 1 Kg

Frame		W	H	D	W1	H1	D1*	S1	Ø1	Ø2	Ø3
B	mm	190.0	320.0	190.0	173.0	303.0	77.9	8.5	22.2	34.0	28.0
	inch	7.48	12.60	7.48	6.81	11.93	3.07	0.33	0.87	1.34	1.10

*D1: Flange mount.

Frame C

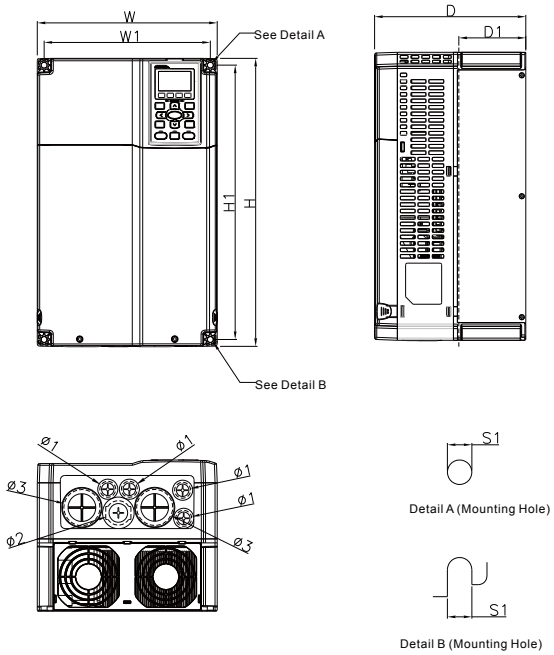

Model	
VFD150C23A-21	VFD185C63B-21
VFD185C23A-21	VFD220C63B-21
VFD220C23A-21	VFD300C63B-21
VFD185C43A-21	VFD370C63B-21
VFD220C43A-21	
VFD300C43A-21	
VFD185C4EA-21	
VFD220C4EA-21	
VFD300C4EA-21	

Weight

230 V_{AC} Models: 9.8 ± 1.5 Kg
460 V_{AC} Models: 9.8 ± 1.5 Kg
575 V_{AC} Models: 10 ± 1.5 Kg

Frame		W	H	D	W1	H1	D1*	S1	Ø1	Ø2	Ø3
C	mm	250.0	400.0	210.0	231.0	381.0	92.9	8.5	22.2	34.0	50.0
	inch	9.84	15.75	8.27	9.09	15.00	3.66	0.33	0.87	1.34	1.97

*D1: Flange mount.

Frame D1

Model Frame_D1	Frame_D0-1
VFD300C23A-00 VFD370C23A-00 VFD550C43A-00 VFD750C43A-00 VFD450C63B-00 VFD550C63B-00	VFD370C43S-00 VFD450C43S-00

Weight

Frame D1

230 V_{AC} Models: 38.5 ± 1.5 Kg

460 V_{AC} Models: 38.5 ± 1.5 Kg

690 V_{AC} Models: 39 ± 1.5 Kg

Frame D0-1

460 V_{AC} Models: 27 ± 1.5 Kg

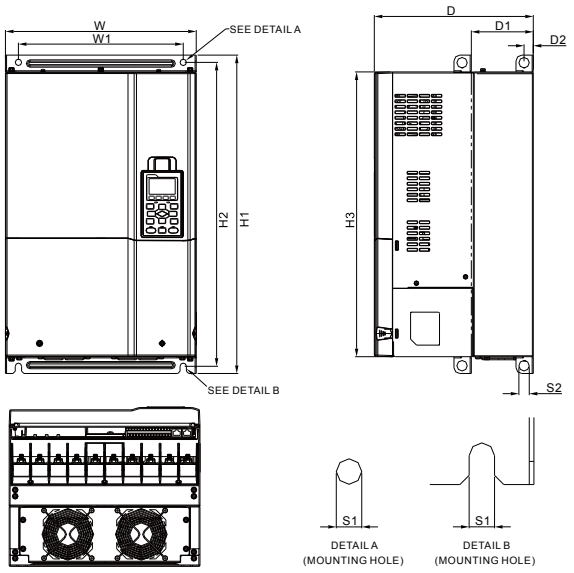

Frame		W	H	D	W1	H1	H2	H3	D1*	D2	S1	S2	Ø1	Ø2	Ø3
D1	mm	330.0	-	275.0	285.0	550.0	525.0	492.0	107.2	16.0	11.0	18.0	-	-	-
	inch	12.99	-	10.83	11.22	21.65	20.67	19.37	4.22	0.63	0.43	0.71	-	-	-

Frame		W	H	D	W1	H1	H2	H3	D1*	D2	S1	S2
D0-1	mm	280.0	-	255.0	235.0	500.0	475.0	442.0	94.2	16.0	11.0	18.0
	inch	11.02	-	10.04	9.25	19.69	18.70	17.40	3.71	0.63	0.43	0.71

*D1: Flange mount.

Frame D2

Model Frame_D2	Frame_D0-2
VFD300C23A-21 VFD370C23A-21 VFD550C43A-21 VFD750C43A-21 VFD450C63B-21 VFD550C63B-21	VFD370C43S-21 VFD450C43S-21

Weight

Frame D2

230 V_{AC} Models: 38.5 ± 1.5 Kg

460 V_{AC} Models: 38.5 ± 1.5 Kg

690 V_{AC} Models: 39 ± 1.5 Kg

Frame D0-2

460 V_{AC} Models: 27 ± 1.5 Kg

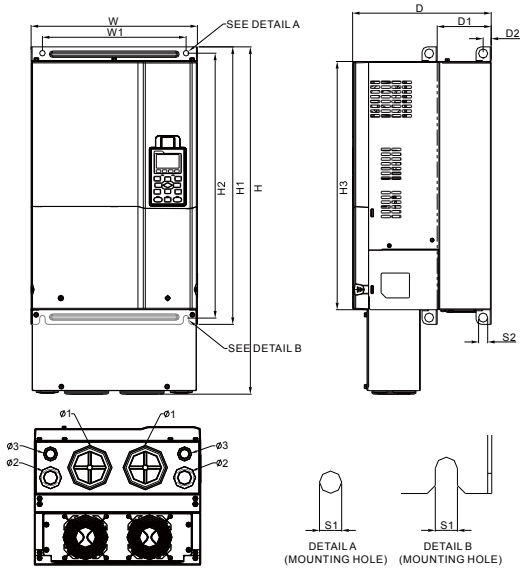

Frame		W	H	D	W1	H1	H2	H3	D1*	D2	S1	S2	Ø1	Ø2	Ø3
D2	mm	330.0	688.3	275.0	285.0	550.0	525.0	492.0	107.2	16.0	11.0	18.0	76.2	34.0	22.0
	inch	12.99	27.10	10.83	11.22	21.65	20.67	19.37	4.22	0.63	0.43	0.71	3.00	1.34	0.87
Frame		W	H	D	W1	H1	H2	H3	D1*	D2	S1	S2	Ø1	Ø2	Ø3
D0-2	mm	280.0	614.4	255.0	235.0	500.0	475.0	442.0	94.2	16.0	11.0	18.0	62.7	34.0	22.0
	inch	11.02	21.19	10.04	9.25	19.69	18.70	17.40	3.71	0.63	0.43	0.71	2.47	1.34	0.87

*D1: Flange mount.

Frame E1

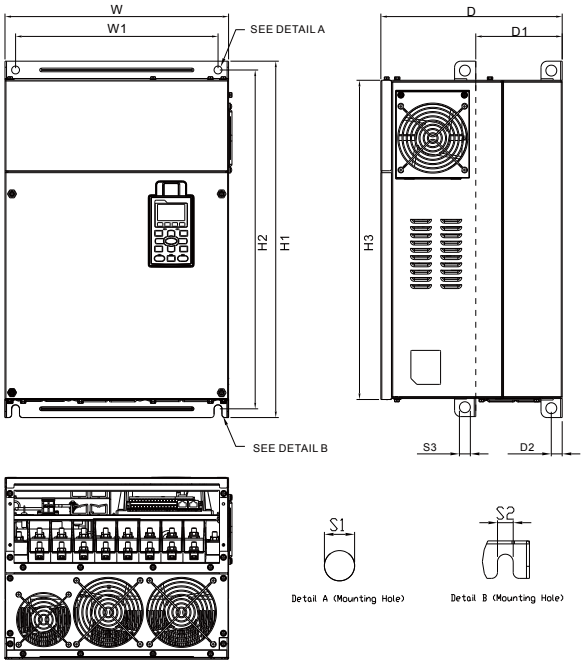

Model
Frame_E1

VFD450C23A-00	VFD750C63B-00
VFD550C23A-00	VFD900C63B-00
VFD750C23A-00	VFD1100C63B-00
VFD900C43A-00	VFD1320C63B-00
VFD1100C43A-00	

Weight
230 V_{AC} Models: 64.8 ± 1.5 Kg
460 V_{AC} Models: 64.8 ± 1.5 Kg
690 V_{AC} Models: 61 ± 1.5 Kg

Frame		W	H	D	W1	H1	H2	H3	D1*	D2	S1	S2	S3	Ø1	Ø2	Ø3
E1	mm	370.0	-	300.0	335.0	589.0	560.0	528.0	143.0	18.0	13.0	13.0	18.0	-	-	-
	inch	14.57	-	11.81	13.19	23.19	22.05	20.80	5.63	0.71	0.51	0.51	0.71	-	-	-

*D1: Flange mount.

Frame E2

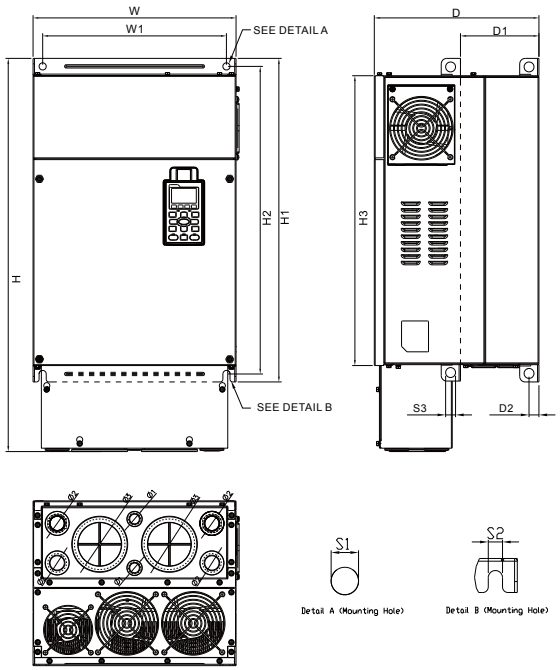

Model
Frame_E2

VFD450C23A-21	VFD750C63B-21
VFD550C23A-21	VFD900C63B-21
VFD750C23A-21	VFD1100C63B-21
VFD900C43A-21	VFD1320C63B-21
VFD1100C43A-21	

Weight
230 V_{AC} Models: 64.8 ± 1.5 Kg
460 V_{AC} Models: 64.8 ± 1.5 Kg
690 V_{AC} Models: 61 ± 1.5 Kg

Frame		W	H	D	W1	H1	H2	H3	D1*	D2	S1	S2	S3	Ø1	Ø2	Ø3
E2	mm	370.0	715.8	300.0	335.0	589.0	560.0	528.0	143.0	18.0	13.0	13.0	18.0	22.0	34.0	92.0
	inch	14.57	28.18	11.81	13.19	23.19	22.05	20.80	5.63	0.71	0.51	0.51	0.71	0.87	1.34	3.62

*D1: Flange mount.

Frame F1

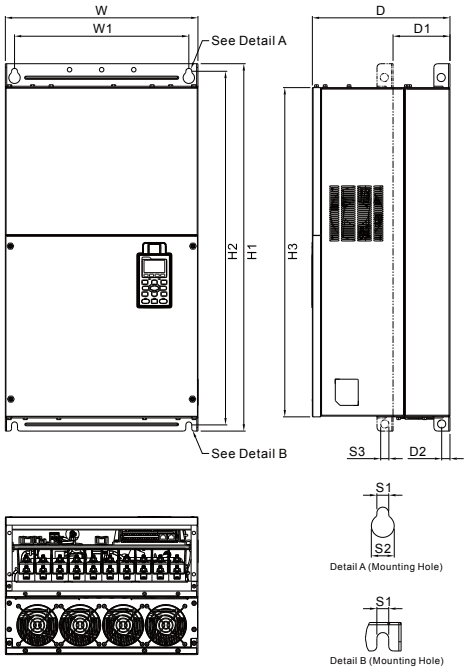

Model
Frame_F1

VFD900C23A-00
VFD1320C43A-00
VFD1600C43A-00
VFD1600C63B-00
VFD2000C63B-00

Weight

230 V_{AC} Models: 86.5 ± 1.5 Kg
460 V_{AC} Models: 86.5 ± 1.5 Kg
690 V_{AC} Models: 88 ± 1.5 Kg

Frame		W	H	D	W1	H1	H2	H3	D1*	D2	S1	S2	S3	Ø1	Ø2	Ø3
F1	mm	420.0	-	300.0	380.0	800.0	770.0	717.0	124.0	18.0	13.0	25.0	18.0	92.0	35.0	22.0
	inch	16.54	-	11.81	14.96	31.50	30.32	28.23	4.88	0.71	0.51	0.98	0.71	3.62	1.38	0.87

*D1: Flange mount.

Frame F2

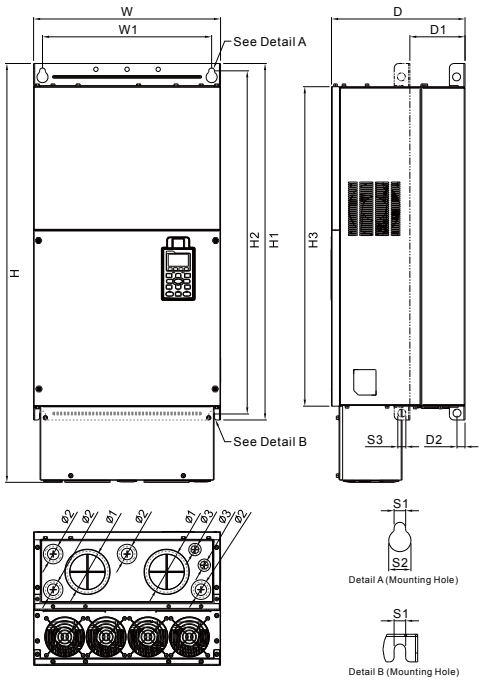

Model
Frame_F2

VFD900C23A-21
VFD1320C43A-21
VFD1600C43A-21
VFD1600C63B-21
VFD2000C63B-21

Weight

230 V_{AC} Models: 86.5 ± 1.5 Kg
460 V_{AC} Models: 86.5 ± 1.5 Kg
690 V_{AC} Models: 88 ± 1.5 Kg

Frame		W	H	D	W1	H1	H2	H3	D1*	D2	S1	S2	S3	Ø1	Ø2	Ø3
F2	mm	420.0	940.0	300.0	380.0	800.0	770.0	717.0	124.0	18.0	13.0	25.0	18.0	92.0	35.0	22.0
	inch	16.54	37.00	11.81	14.96	31.50	30.32	28.23	4.88	0.71	0.51	0.98	0.71	3.62	1.38	0.87

*D1: Flange mount.

Frame G1

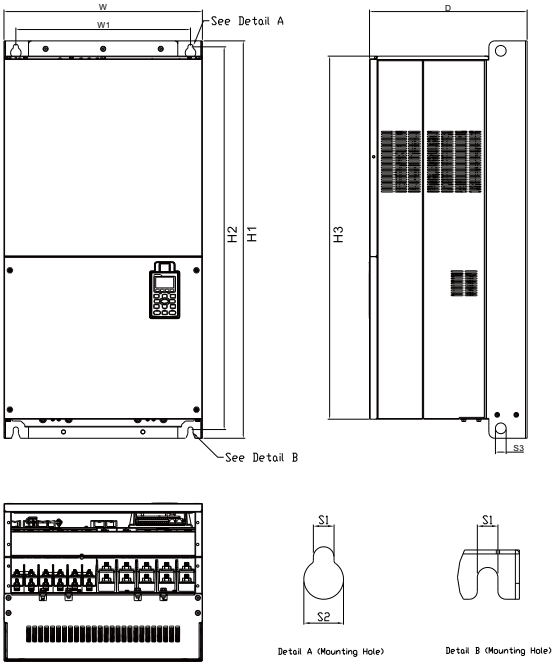

Model
Frame_G1

VFD1850C43A-00
VFD2000C43A-00
VFD2200C43A-00
VFD2500C43A-00
VFD2500C63B-00
VFD3150C63B-00

Weight
460 V_{AC} Models: 134 ± 4 Kg
690 V_{AC} Models: 135 ± 4 Kg

Frame		W	H	D	W1	H1	H2	H3	S1	S2	S3	Ø1	Ø2	Ø3
G1	mm	500.0	-	397.0	440.0	1000.0	963.0	913.6	13.0	26.5	27.0	-	-	-
	inch	19.69	-	15.63	217.32	39.37	37.91	35.97	0.51	1.04	1.06	-	-	-

Frame G2

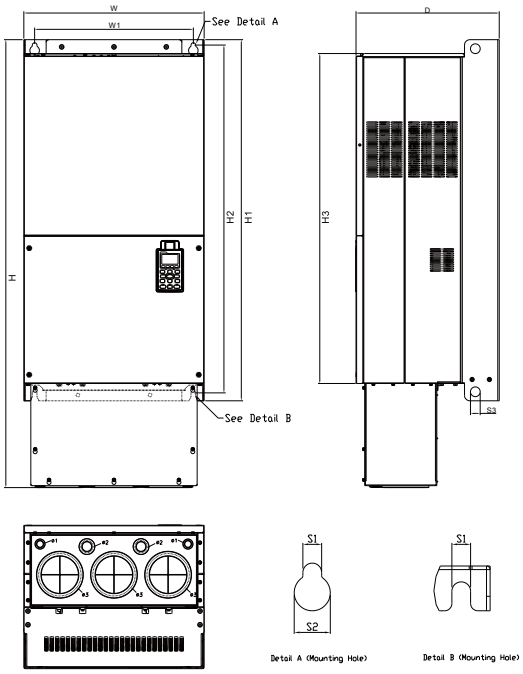

Model
Frame_G2

VFD1850C43A-21
VFD2000C43A-21
VFD2200C43A-21
VFD2500C43A-21
VFD2500C63B-21
VFD3150C63B-21

Weight
460 V_{AC} Models: 134 ± 4 Kg
690 V_{AC} Models: 135 ± 4 Kg

Frame		W	H	D	W1	H1	H2	H3	S1	S2	S3	Ø1	Ø2	Ø3
G2	mm	500.0	1240.2	397.0	440.0	1000.0	963.0	913.6	13.0	26.5	27.0	22.0	34.0	117.5
	inch	19.69	48.83	15.63	217.32	39.37	37.91	35.97	0.51	1.04	1.06	0.87	1.34	4.63

Frame H1

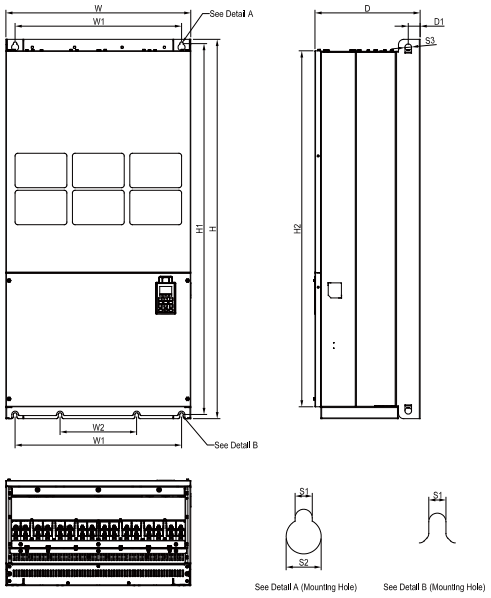

Model
Frame_H1

VFD2800C43A-00
VFD3150C43A-00
VFD3550C43A-00
VFD4000C43A-00
VFD4500C43A-00
VFD5000C43A-00
VFD5600C43A-00

Weight
460 V_{AC} Models: 228 ± 5 Kg

Frame		W	H	D	W1	W2	W3	W4	W5	W6	H1	H2	H3	H4
H1	mm	700.0	1435.0	398.0	630.0	290.0	-	-	-	-	1403.0	1346.6	-	-
	inch	27.56	56.50	15.67	24.80	11.42	-	-	-	-	55.24	53.02	-	-
Frame		**H5**	**D1**	**D2**	**D3**	**D4**	**D5**	**D6**	**S1**	**S2**	**S3**	**Ø1**	**Ø2**	**Ø3**
H1	mm	-	45.0	-	-	-	-	-	13.0	26.5	25.0	-	-	-
	inch	-	1.77	-	-	-	-	-	0.51	1.04	0.98	-	-	-

Frame H3

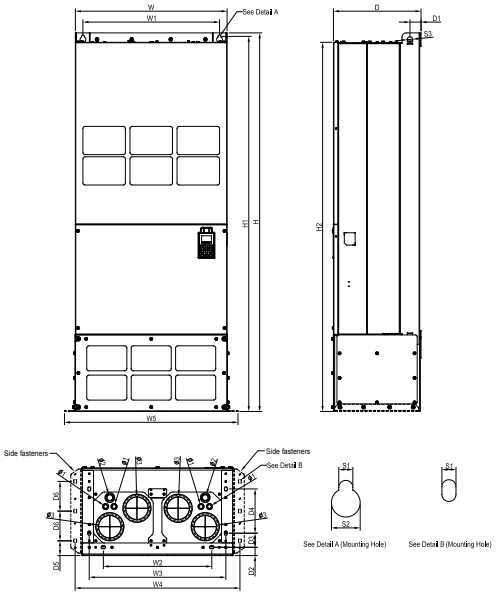

Model
Frame_H3

VFD2800C43C-21
VFD3150C43C-21
VFD3550C43C-21
VFD4000C43C-21
VFD4500C43C-21
VFD5000C43C-21
VFD5600C43C-21

Weight
460 V_{AC} Models: 228 ± 5 Kg

Frame		W	H	D	W1	W2	W3	W4	W5	W6	H1	H2	H3	H4
H3	mm	700.0	1745.0	404.0	630.0	500.0	630.0	760.0	800.0	-	1729.0	1701.6	-	-
	inch	27.56	68.70	15.9	24.80	19.69	24.80	29.92	31.50	-	68.07	66.99	-	-
Frame		**H5**	**D1**	**D2**	**D3**	**D4**	**D5**	**D6**	**S1**	**S2**	**S3**	**Ø1**	**Ø2**	**Ø3**
H3	mm	-	51.0	38.0	65.0	204.0	68.0	137.0	13.0	26.5	25.0	22.0	34.0	117.5
	inch	-	2.0	1.50	2.56	8.03	2.68	5.4	0.51	1.04	0.98	0.87	1.34	4.63

690 V Frame H1

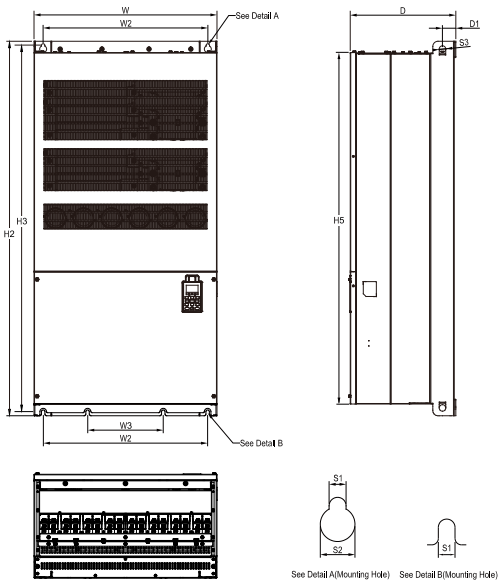

Model
690v Frame_H1

VFD4000C63B-00
VFD4500C63B-00
VFD5600C63B-00
VFD6300C63B-00

Weight
690 V_{AC} Models: 243 ± 5 Kg

Frame		W	H	D	W1	W2	W3	W4	W5	W6	H1	H2	H3	H4
H1	mm	700.0	-	398.0	-	630.0	290.0	-	-	-	-	1435.0	1403.0	-
	inch	27.56	-	15.67	-	24.80	11.42	-	-	-	-	56.50	55.24	-
Frame		**H5**	**D1**	**D2**	**D3**	**D4**	**D5**	**D6**	**S1**	**S2**	**S3**	**Ø1**	**Ø2**	**Ø3**
H1	mm	1346.6	45.0	-	-	-	-	-	13.0	26.5	25.0	-	-	-
	inch	53.02	1.77	-	-	-	-	-	0.51	1.04	0.98	-	-	-

690 V Frame H2

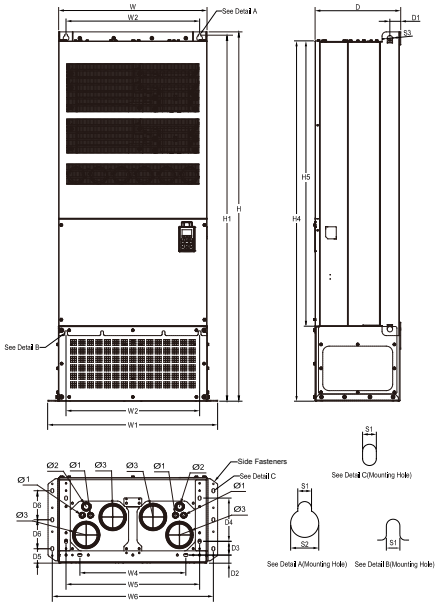

Model
690v Frame_H2

VFD4000C63B-21
VFD4500C63B-21
VFD5600C63B-21
VFD6300C63B-21

Weight
690 V_{AC} Models: 243 ± 5 Kg

Frame		W	H	D	W1	W2	W3	W4	W5	W6	H1	H2	H3	H4
H2	mm	700.0	1745.0	404.0	800.0	630.0	-	500.0	630.0	760.0	1729.0	-	-	1701.6
	inch	27.56	68.70	15.91	31.50	24.80	-	19.69	24.80	29.92	68.07	-	-	66.99
Frame		**H5**	**D1**	**D2**	**D3**	**D4**	**D5**	**D6**	**S1**	**S2**	**S3**	**Ø1**	**Ø2**	**Ø3**
H2	mm	1346.6	51.0	38.0	65.0	204.0	68.0	137.0	13.0	26.5	25.0	22.0	34.0	117.5
	inch	53.02	2.01	1.50	2.56	8.03	2.68	5.39	0.51	1.04	0.98	0.87	1.34	4.63

Wiring

Wiring Diagram for Frame A ~ C

*Input: 3-phase power

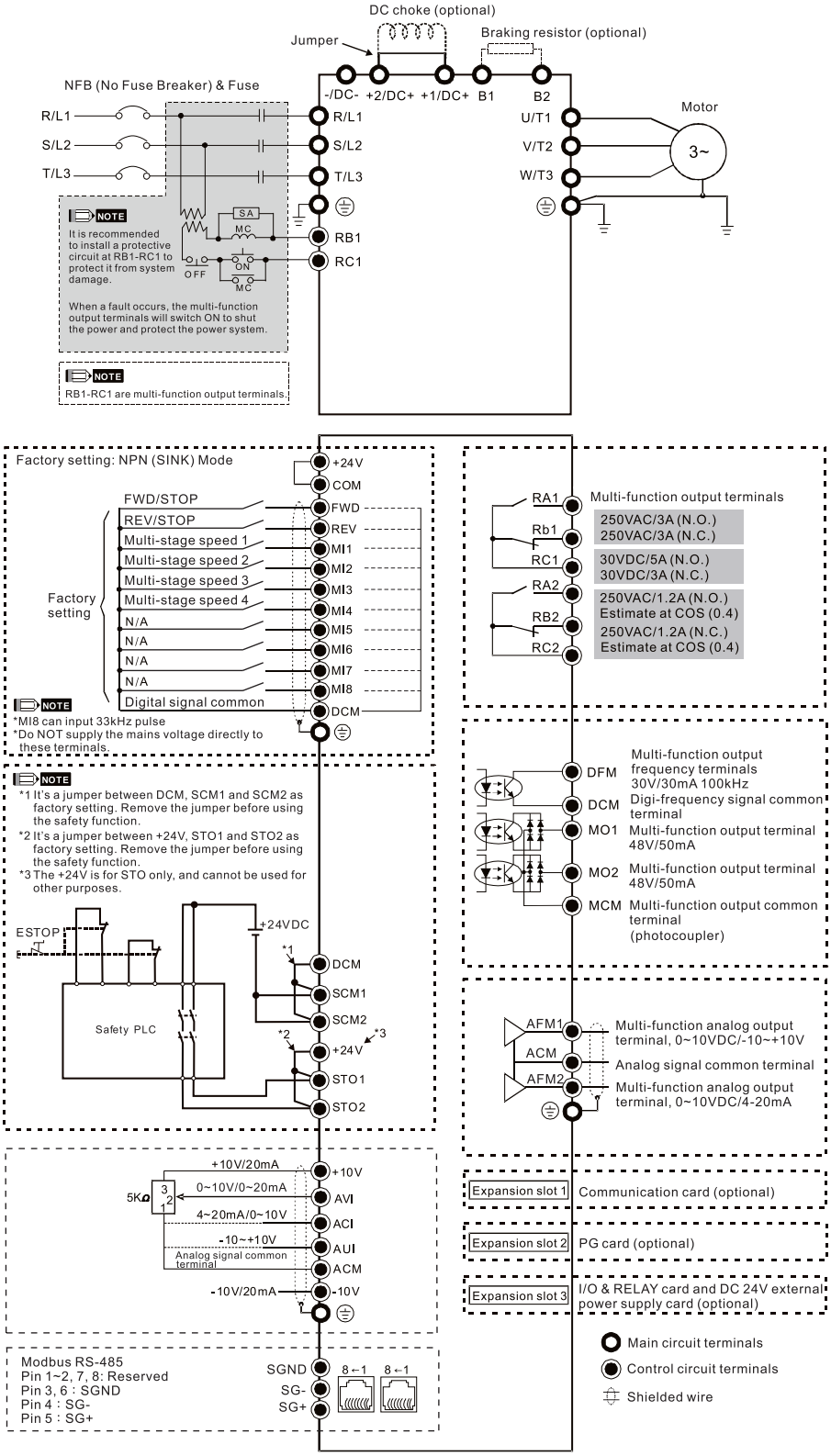

NOTE

It is not recommended to use a power capacitor or automatic power factor regulator (APFR) at the power input side. If the system requires such a device, please make sure a reactor is installed between the drive and the power capacitor or APFR.

Wiring Diagram for Frame D ~ F

*Input: 3-phase power

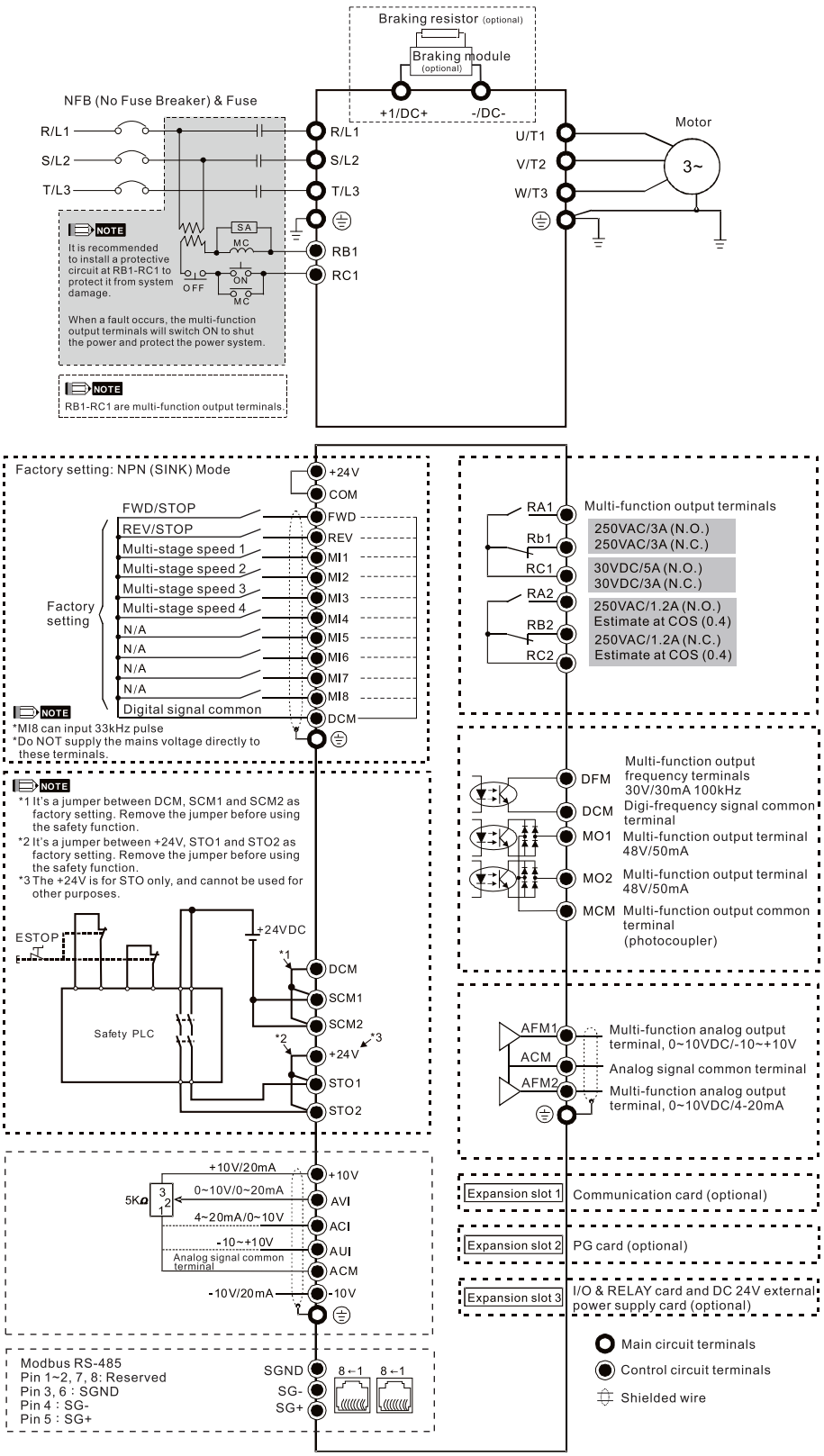

Wiring Diagram for Frame G ~ H

*Input: 3-phase power

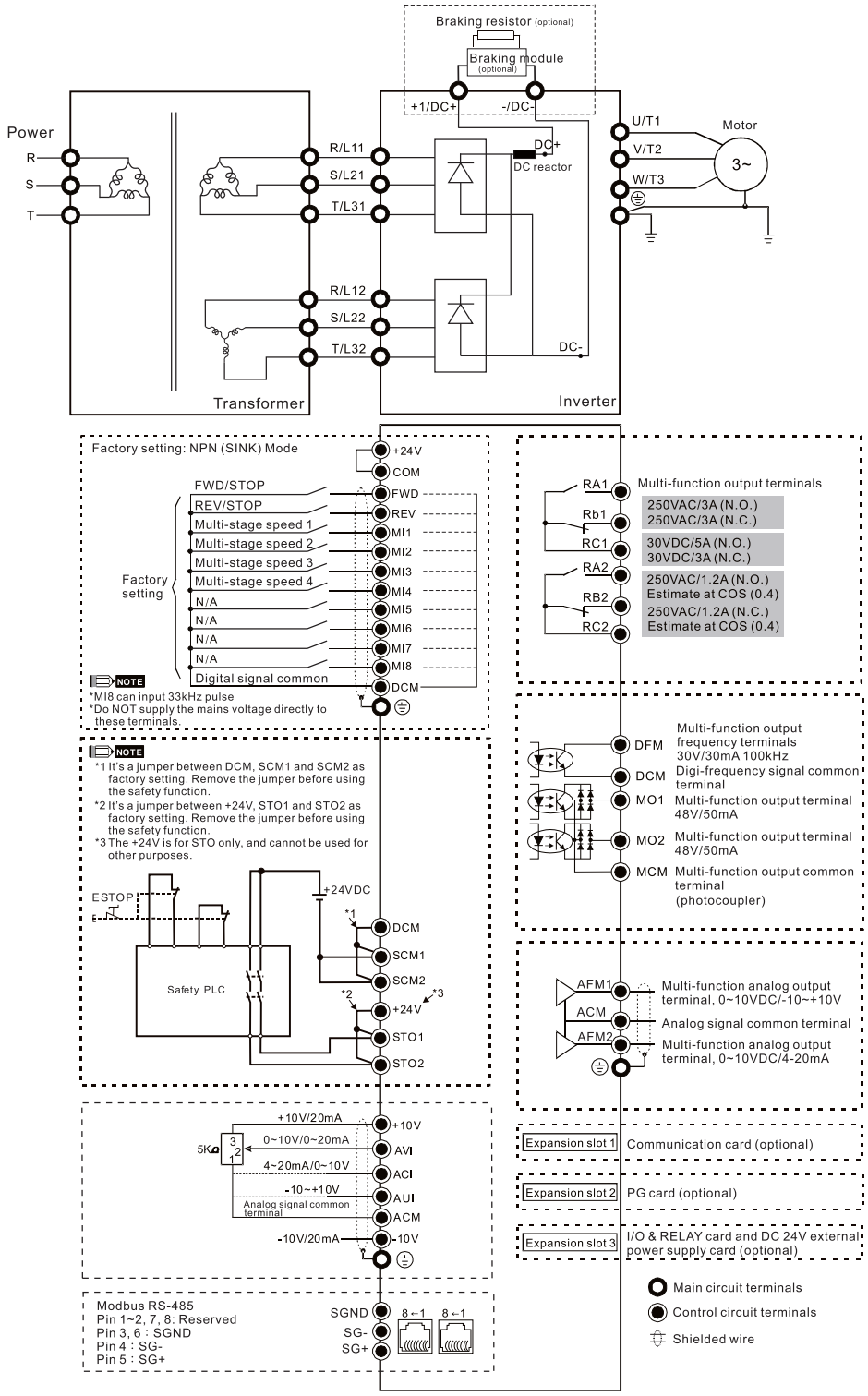

NOTE

It is not recommended to use a power capacitor or automatic power factor regulator (APFR) at the power input side. If the system requires such a device, please make sure a reactor is installed between the drive and the power capacitor or APFR.

Optional Accessories

C2000 Plus provides complete optional accessories to comply with the International safety regulations for overall solution performance.

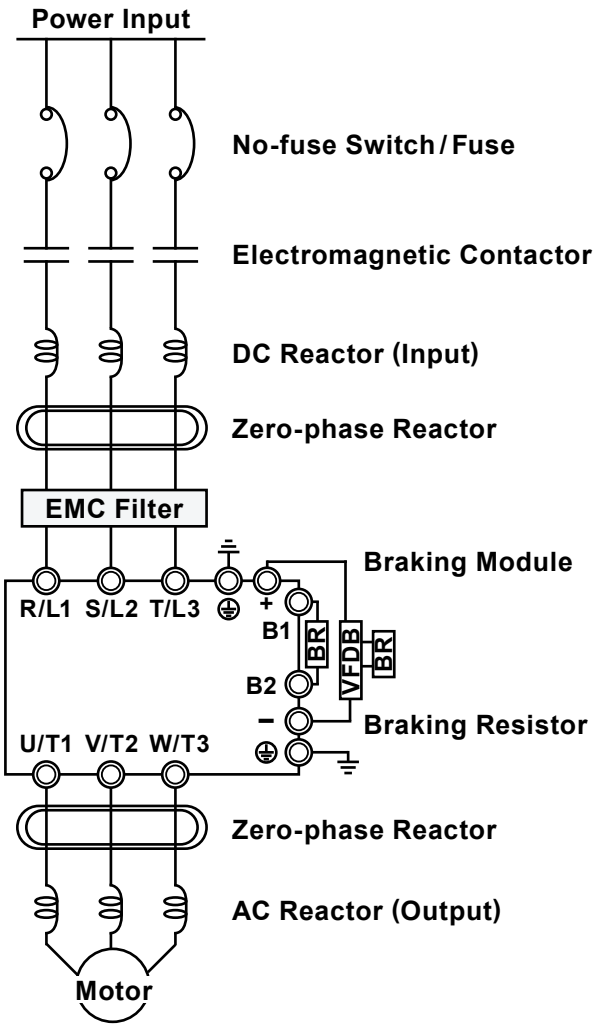

Mains Electricity Input	Please refer to the rated power supply
No-fuse Switch / Fuse	There may be a large input current when the power is turned on. (Refer to the user manual 7-2 & 7-3 for details)
Electro-magnetic Contactor	Turn on / off the side electromagnetic contactor to run / stop the motor drive. (Refer to the user manual 7-2 for details)
AC Input Reactor	When the main power supply capacity is greater than 500 kVA, avoid excess current peaks damaging the motor drive to improve the power factor and reduce harmonics. (Refer to the user manual 7-4 for details)
EMC Filter	Reduces electromagnetic noise. (Refer to the user manual 7-6 for details)
Zero-phase Reactor	Reduces conducted and radiated interference. (Refer to the user manual 7-5 & 7-6 for details)
Braking Resistor / Braking Unit	Shortens the motor deceleration time. (Refer to the user manual 7-1 for details)
AC Output Reactor	Suppresses the abnormal dv/dt voltage peaks caused from the reflected waves of the long motor wiring. (Refer to the user manual 7-4 for details)
Sine Wave Filter	Filters cutoff frequency outputs from the motor drive to reduce motor noise or especially long wiring (> 1,000 m for oil wells, deep water pumps) (Refer to the user manual 7-4 for details)

* Please refer to the specifications of no-fuse switch, electromagnetic contactor, and the AC / DC reactor for 575 V_{AC} / 690 V_{AC} for your purchase.

AC / DC Reactors, Sine Wave Filters & Braking Modules

The overall accessories for the C2000 Plus Series are listed below. You may also refer to the user manual Chapter 7 - Dimensions & Specifications.

230 VAC Models

Frame	Model Name	AC Input Reactor		AC Output Reactor	
		Heavy Duty (HD)	Super Heavy Duty (SHD)	Heavy Duty (HD)	Super Heavy Duty (SHD)
A	VFD007C23A-21	DR005A0254	N/A	DR005L0254	N/A
	VFD015C23A-21	DR008A0159	DR005A0254	DR008L0159	DR005L0254
	VFD022C23A-21	DR011A0115	DR008A0159	DR011L0115	DR008L0159
	VFD037C23A-21	DR017AP746	DR011A0115	DR017LP746	DR011L0115
B	VFD055C23A-21	DR025AP507	DR017AP746	DR025LP507	DR017LP746
	VFD075C23A-21	DR033AP320	DR025AP507	DR033LP320	DR025LP507
	VFD110C23A-21	DR049AP215	DR033AP320	DR049LP215	DR033LP320
C	VFD150C23A-21	DR065AP163	DR049AP215	DR065LP162	DR049LP215
	VFD185C23A-21	DR075AP170	DR065AP163	DR075LP170	DR065LP162
	VFD220C23A-21	DR090AP141	DR075AP170	DR090LP141	DR075LP170
D	VFD300C23A-00/-21	DR146AP087	DR090AP141	DR146LP087	DR090LP141
	VFD370C23A-00/-21	DR146AP087	DR146AP087	DR146LP087	DR146LP087
E	VFD450C23A-00/-21	DR180AP070	DR146AP087	DR180LP070	DR146LP087
	VFD550C23A-00/-21	DR215AP059	DR180AP070	DR215LP059	DR180LP070
	VFD750C23A-00/-21	DR276AP049	DR215AP059	DR276LP049	DR215LP059
F	VFD900C23A-00/-21	DR349AP037	DR276AP049	DR346LP037	DR276LP049

Note 1: *2 indicates two in serial connection

460 VAC Models

Frame	Model Name	AC Input Reactor		AC Output Reactor	
		Heavy Duty (HD)	Super Heavy Duty (SHD)	Heavy Duty (HD)	Super Heavy Duty (SHD)
A	VFD007C43A-21	DR003A0810	N/A	DR003L0810	N/A
	VFD015C43A-21	DR004A0607	DR003A0810	DR004L0607	DR003L0810
	VFD022C43A-21	DR006A0405	DR004A0607	DR006L0405	DR004L0607
	VFD037C43A-21	DR009A0270	DR006A0405	DR009L0270	DR006L0405
	VFD040C43A-21	DR010A0231	DR009A0270	DR010L0231	DR009L0270
	VFD055C43A-21	DR012A0202	DR010A0231	DR012L0202	DR010L0231
B	VFD075C43A-21	DR018A0117	DR012A0202	DR018L0117	DR012L0202
	VFD110C43A-21	DR024AP881	DR018A0117	DR024LP881	DR018L0117
	VFD150C43A-21	DR032AP660	DR024AP881	DR032LP660	DR024LP881
C	VFD185C43A-21	DR038AP639	DR032AP660	DR038LP639	DR032LP660
	VFD220C43A-21	DR045AP541	DR038AP639	DR045LP541	DR038LP639
	VFD300C43A-21	DR060AP405	DR045AP541	DR060LP405	DR045LP541
D0	VFD370C43S-XX	DR073AP334	DR060AP405	DR073LP334	DR060LP405
	VFD450C43S-XX	DR091AP267	DR073AP334	DR091LP267	DR073LP334
D	VFD550C43A-XX	DR110AP221	DR091AP267	DR110LP221	DR091LP267
	VFD750C43A-XX	DR150AP162	DR110AP221	DR150LP162	DR110LP221
E	VFD900C43A-XX	DR180AP135	DR150AP162	DR180LP135	DR150LP162
	VFD1100C43A-XX	DR220AP110	DR180AP135	DR220LP110	DR180LP135
F	VFD1320C43A-XX	DR260AP098	DR220AP110	DR260LP098	DR220LP110
	VFD1600C43A-XX	DR310AP078	DR260AP098	DR310LP078	DR260LP098
G	VFD1850C43A-XX	DR370AP066	DR310AP078	DR370LP066	DR310LP078
	VFD2200C43A-XX	DR460AP054	DR370AP066	DR460LP054	DR370LP066
H	VFD2800C43X-XX	DR550AP044	DR460AP054	DR550LP044	DR460LP054
	VFD3150C43X-XX	DR616AP039	DR550AP044	DR616LP039	DR550LP044
	VFD3550C43X-XX	DR683AP036	DR616AP039	DR683LP036	DR616LP039
	VFD4500C43X-XX	DR866AP028	DR683AP036	DR866LP028	DR683LP036
	VFD5000C43X-XX	N/A	DR866AP028	N/A	DR866LP028
	VFD5600C43X-XX	N/A	N/A	N/A	N/A

Note 1: *2 indicates two in serial connection | **Note 2:** Indicates two in parallel and two in serial connection. | **Note 3:** Indicates four in serial connection. |
Note 4: Indicates five in parallel and two in serial connection. | **Note 5:** Indicates six in parallel and two in serial connection. |
Note 6: Indicates seven in parallel and two in serial connection.

DC Reactor		Braking Resistor	VFDB Braking Unit	Sine Wave Filter
Heavy Duty (HD)	Super Heavy Duty (SHD)			
DR005D0585	N/A	BR080W200*1	Built-in	B84143V0006R227
DR008D0366	DR005D0585	BR200W091*1		B84143V0011R227
DR011D0266	DR008D0366	BR300W070*1		
DR017D0172	DR011D0266	BR400W040*1		B84143V0025R227
DR025D0117	DR017D0172	BR1K0W020*1		
DR033DP851	DR025D0117	BR1K0W020*1		B84143V0033R227
DR049DP574	DR033DP851	BR1K5W013*1		B84143V0050R227
DR065DP432	DR049DP574	BR1K0W4P3*2 *1		B84143V0066R227
DR075DP391	DR065DP432	BR1K0W4P3*2 *1		B84143V0075R227
DR090DP325	DR075DP391	BR1K5W3P3*2 *1		B84143V0095R227
Built-in	Built-in	BR1K0W5P1*2 *1	2015*2	B84143V0132R227
		BR1K2W3P9*2 *1	2022*2	B84143V0180R227
		BR1K5W3P3*2 *1	2022*2	
		BR1K2W3P9*2 *1	2022*3	B84143V0250R227
		BR1K2W3P9*2 *1	2022*4	B84143V0320R227
		BR1K5W3P3*2 *1	2022*4	Recommended vendor: EPCOS

DC Reactor		Braking Resistor	VFDB Braking Unit	Sine Wave Filter
Heavy Duty (HD)	Super Heavy Duty (SHD)			
DR003D1870	N/A	BR080W750*1	Built-in	B84143V0004R227
DR004D1403	DR003D1870	BR200W360*1		
DR006D0935	DR004D1403	BR300W250*1		B84143V0006R227
DR009D0623	DR006D0935	BR400W150*1		B84143V0011R227
DR010D0534	DR009D0623	BR1K0W075*1		
DR012D0467	DR010D0534			B84143V0016R227
DR018D0311	DR012D0467			B84143V0025R227
DR024D0233	DR018D0311	BR1K5W043*1		
DR032D0175	DR024D0233	BR1K0W016*2 *1		B84143V0033R227
DR038D0147	DR032D0175			B84143V0050R227
DR045D0124	DR038D0147	BR1K5W013*2 *1		
DR060DP935	DR045D0124	BR1K0W016*4 *2		B84143V0066R227
Built-in	Built-in	BR1K2W015*4 *2	4045*1	B84143V0075R227
		BR1K5W013*4 *2	4045*1	B84143V0095R227
		BR1K0W5P1*4 *3	4030*2	B84143V0132R227
		BR1K2W015*4 *2	4045*2	B84143V0180R227
		BR1K5W013*4 *2	4045*2	
		BR1K2W015*10 *4	4110*1	B84143V0250R227
		BR1K5W012*12 *5	4160*1	B84143V0320R227
		BR1K5W012*12 *5	4160*1	
		BR1K5W012*14 *6	4185*1	Recommended vendor: EPCOS
		BR1K2W015*10 *4	4110*2	
		BR1K5W012*12 *5	4160*2	
		BR1K5W012*12 *5	4160*2	
		BR1K5W012*14 *6	4185*2	
		BR1K5W012*12 *5	4185*3	
		BR1K5W012*14 *6	4185*3	
		BR1K5W012*12 *5	4160*4	

575 VAC Models

Frame	Model Name	AC Input Reactor		AC Output Reactor		DC Reactor		Braking Resistor	VFDB Braking Unit
		Heavy Duty (HD)	Super Heavy Duty (SHD)	Heavy Duty (HD)	Super Heavy Duty (SHD)	Heavy Duty (HD)	Super Heavy Duty (SHD)		
A	VFD015C53A-21	Please refer to the user manual 7-4 for self purchase.						BR080W750*1	Built-in
	VFD022C531-21							BR200W360*1	
	VFD037C53A-21							BR300W400*1	
B	VFD055C53A-21							BR500W100*1	
	VFD075C53A-21							BR750W140*1	
	VFD110C53A-21							BR1K0W075*1	
	VFD150C53A-21							BR1K1W091*1	

690 VAC Models

Frame	Model Name	AC Input Reactor		AC Output Reac-tor		DC Reactor		Braking Resistor	VFDB Braking Unit
		Heavy Duty (HD)	Super Heavy Duty (SHD)	Heavy Duty (HD)	Super Heavy Duty (SHD)	Heavy Duty (HD)	Super Heavy Duty (SHD)		
C	VFD185C63B-21	Please refer to the user manual 7-4 for self purchase.						BR1K0W039*2 *1	Built-in
	VFD220C63B-21							BR1K2W033*2 *1	
	VFD300C63B-21							BR1K5W027*2 *1	
	VFD370C63B-21							BR1K2W015*3 *2	
D	VFD450C63B-XX							BR1K2W033*4 *3	6055*1
	VFD550C63B-XX							BR1K5W027*4 *3	
E	VFD750C63B-XX							BR1K2W033*6 *4	6110*1
	VFD900C63B-XX							BR1K5W027*6 *4	
	VFD1100C63B-XX							BR1K5W027*8 *5	
	VFD1320C63B-XX							BR1K2W015*12 *6	6160*1
F	VFD1600C63B-XX							BR1K5W027*10 *7	
	VFD2000C63B-XX							BR1K5W027*12 *8	6200*1
G	VFD2500C63B-XX							BR1K5W027*8 *5	6110*2
	VFD3150C63B-XX							BR1K5W027*10 *7	6160*2
H	VFD4000C63B-XX							BR1K5W027*12 *8	6200*2
	VFD4500C63B-XX							BR1K5W027*14 *9	
	VFD5600C63B-XX							BR1K5W027*12 *8	6200*3
	VFD6300C63B-XX							BR1K5W027*12 *8	6200*4

Note 1: *2 indicates two in serial connection | **Note 2:** Indicates three in serial connection. | **Note 3:** Indicates two in serial and two in parallel connection. |
Note 4: Indicates two in serial and three in parallel connection. | **Note 5:** Indicates two in serial and four in parallel connection. |
Note 6: Indicates three in serial and four in parallel connection. | **Note 7:** Indicates two in serial and five in parallel connection. |
Note 8: Indicates two in serial and six in parallel connection. | **Note 9:** Indicates two in serial and seven in parallel connection.

EMC Filter & Zero-phase Reactor

There are various combinations of installation places and quantity of EMC filters and zero-phase reactors for the C2000 Plus Series to meet electromagnetic compliance regulatory requirements for diverse applications. Please refer to the user manual 7-6 for details.

EMC Regulatory Requirements	Regulatory Classes		
EN 55011 Standard for Industrial, scientific and medical (ISM) equipment	**Class B**	**Class A Group 1**	**Class A Group 2**
EN/IEC61800-3:2004 Standard for power drive systems (PDSs)	**Category C1** 1st environment, unrestricted distribution, such as houses or offices in a residential building	**Category C2** 1st environment, restricted distribution, such as houses or offices in a residential building	**Category C3** 2nd environment, unrestricted distribution, such as industrial areas
C2000 Plus Compliance *1	–	✓	✓

Note 1: The place and the number of the zero-phase reactor installed and the selection of EMC filter may be different according to the Standard EN 61800-3. Please refer to the user manual for details.

Accessories

PG Card

▪EMC-PG01L / EMC-PG02L

Set by
Pr.10-00 ~ 10-02

Terminals		Description
PG1	VP	Output voltage for power: +5V/+12V ± 5% (use FSW3 to switch +5V/+12V) Max. output current: 200mA
	DCM	Common for power and signal
	A1, $\overline{A1}$, B1, $\overline{B1}$, Z1, $\overline{Z1}$	Encoder input signal (Line Driver) Open collector input: +5 V / +24 V *Note1 1-phase or 2-phase input Max. input frequency: EMC-PG01L: 300kHz; EMC-PG02L: 30kHz
PG2	A2, $\overline{A2}$, B2, $\overline{B2}$	Pulse input signal (Line Driver or Open Collector) Open collector input: +5V/+24V *Note1 1-phase or 2-phase input Max. input frequency: EMC-PG01L: 300kHz; EMC-PG02L: 30KHz
PG OUT	AO, $\overline{AO}$, BO, $\overline{BO}$, ZO, $\overline{ZO}$, SG	PG card output signals. Division frequency function: 1 ~ 255 times Max. output voltage for Line driver: 5V_{DC} Max. output current: 15mA Max. output frequency: EMC-PG01L: 300kHz; EMC-PG02L: 30kHz SG: The GND of PG card is the same as the host controller or PLC, so a common output signal is attained

▪EMC-PG01O / EMC-PG02O

Set by
Pr.10-00 ~ 10-02

Terminals		Description
PG1	VP	Output voltage for power: +5V/+12V ± 5% (use FSW3 to switch +5V/+12V) Max. output current: 200mA
	DCM	Common for power and signal
	A1, $\overline{A1}$, B1, $\overline{B1}$, Z1, $\overline{Z1}$	Encoder input signal (Line Driver or Open Collector) Open collector input: +5V/+24V *Note1 1-phase or 2-phase input Max. input frequency: EMC-PG01O: 300kHz; EMC-PG02O: 30kHz
PG2	A2, $\overline{A2}$, B2, $\overline{B2}$	Pulse input signal (Line Driver or Open Collector) Open collector input: +5V/+24V (Note1) 1-phase or 2-phase input Max. input frequency: EMC-PG01O: 300kHz; EMC-PG02O: 30kHz
PG OUT	V+, $\overline{V}$-	Needs external power source for PG OUT circuit. Input voltage of power:+12V~+24V
	V-	Negative power supply input
	A / O, B / O, Z / O	PG card output signals. Division frequency function: 1 ~ 255 times Add a pull-up resistor to the open collector output signals to avoid signal interferences. [Three pull-up resistors are included in the package (1.8KΩ/1W)] Max. Output current: 20mA Max output frequency: EMC-PG01O: 300kHz; EMC-PG02O: 30kHz

▪EMC-PG01R

Set by
Pr.10-00 ~ 10-02

Terminals		Description
PG1	R1- R2	Resolver output power 7Vrms, 10kHz
	S1, S2, S3, S4	Resolver input signal 3.5 ± 0.175Vrms, 10kHz
PG2	A2, $\overline{A2}$, B2, $\overline{B2}$	Pulse input signal (Line Driver or Open Collector) Open collector input: +5V/+24V *Note1 1-phase or 2-phase input; Max. input frequency: 300kHz
PG OUT	AO, $\overline{AO}$, BO, $\overline{BO}$, ZO, $\overline{ZO}$, SG	PG card output signals. Division frequency function: 1 ~ 255 times Max. output voltage for Line driver: 5V_{DC} Max. output current: 15mA Max. output frequency: 300kHz SG: The GND of PG card is the same as the host controller or PLC, so a common output signal is attained

▪EMC-PG01U / EMC-PG02U

FJMP1 Ⓢ: Standard UVW Output Encoder; Ⓓ: Delta Encoder

	Terminals		Description
Set by Pr.10-00 ~ 10-02	PG1	VP	Output voltage for power: +5V/+12V ± 5% (use FSW3 to switch +5V/+12V) Max. output current: 200mA
		DCM	Common for power and signal
		A1, $\overline{A1}$, B1, $\overline{B1}$, Z1, $\overline{Z1}$	Encoder input signal (Line Driver) 1-phase or 2-phase input. Max. input frequency: 300kHz
		U1, $\overline{U1}$, V1, $\overline{V1}$, W1, $\overline{W1}$	Encoder input signal
	PG2	A2, $\overline{A2}$, B2, $\overline{B2}$	Pulse input signal Open collector input: +5V/+24V *Note1 1-phase or 2-phase input; Max. input frequency: 300kHz
	PG OUT	AO, $\overline{AO}$, BO, $\overline{BO}$, ZO, $\overline{ZO}$, SG	PG card output signals. Division frequency function: 1 ~ 255 times Max. output voltage for Line driver: 5V_{DC} Max. output current: 15mA Max. output frequency: 300kHz SG: The GND of PG card is the same as the host controller or PLC, so a common output signal is attained

▪EMC-PG01H NEW

	Terminals		Description
Set by Pr.10-00 ~ 10-02	PG1	VP	Output voltage for power: +5V/+8V ± 5% (use FSW1 to switch +5V/+8V) Max. output current: 200mA
		DCM	Common for power and signal
		A+, A-, B+, B-, R+, R-	Encoder Incremental differential signal input terminals Max. input frequency : 600kHz
		C+, C-, D+, D-	Encoder Absolute differential signal input terminals
	PG2	A2, $\overline{A2}$, B2, $\overline{B2}$	Pulse-train signal input terminals (Line Driver or Open Collector) Open collector input: +5V ~ +24V(Note1) 1-phase or 2-phase input; Max. input frequency: 300kHz
	PG OUT	AO, $\overline{AO}$, BO, $\overline{BO}$, ZO, $\overline{ZO}$, SG	PG card output signals terminals Division frequency function: 1 ~ 255 times Max. output voltage for Line driver: 5 V_{DC} Max. output current: 15mA Max. output frequency: 600kHz ± 5% SG: The GND of PG card is the same as the host controller or PLC, so a common output signal is attained.

Note 1: For the Open Collector, set input voltage to 5 ~ 15mA and install a pull-up resistor
[5V] Recommend pull-up resistor: 100 ~ 220Ω, 1/2W and above
[12V] Recommend pull-up resistor: 510 ~ 1.35KΩ, 1/2W and above
[24V] Recommend pull-up resistor: 1.8K ~ 3.3KΩ, 1/2W and above

Relay Extension Card

▪ EMC-R6AA

	Terminals	Descriptions
	RA10~RA15 **RC10~RC15**	Refer to Pr. 02-36~Pr. 02-41 for multi-function output selection Resistive load: 3A (N.O.)/250 V_{AC} 5A (N.O.)/30 V_{DC} Inductive load (COS 0.4) 1.2A (N.O.)/250 V_{AC} 2.0A (N.O.)/30 V_{DC} It is used to output each monitor signal, such as for drive in operation, frequency attained or overload indication.

Analog I/O Extension Card

▪ EMC-A22A

	Terminals	Description
	AVI10 **AVI11**	Refer to Pr. 14-00~Pr. 14-01 for function selection (input), and Pr. 14-18~Pr. 14-19 for mode selection Two sets of AVI port for AVI or ACI switch: SSW3 (AVI10) and SSW4 (AVI11) AVI: Input 0~10 V ACI: Input 0~20 mA/4~20 mA
	AFM10 **AFM11**	Refer to Pr. 14-12~Pr. 14-13 for function selection (output), and Pr. 14-36~Pr. 14-37 for mode selection Two sets of AFM port for AVO or ACO switch: SSW1 (AFM10) and SSW2 (AFM11) AVO: Output 0~10 V ACO: Output 0~20.0 mA/4.0~20.0 mA
	ACM	Analog signal common terminal

I/O Extension Card

▪ EMC-D611A

	Terminals	Descriptions
	AC	AC power common for multi-function input terminal (Neutral)
	MI10~MI15	Refer to Pr. 02-26~Pr. 02-31 for multi-function input selection Input voltage: 100~130 V_{AC}; Input frequency: 57~63 Hz Input impedance: 27 KΩ Terminal response time: ON: 10 ms; OFF: 20 ms

▪ EMC-D42A

	Terminals	Descriptions
	COM	Common for multi-function input terminals Select SINK (NPN)/SOURCE (PNP) in J1 jumper/external power supply
	MI10~MI13	Refer to Pr. 02-26~Pr. 02-29 to program the multi-function inputs MI10~MI13 Internal power is applied from terminal E24: +24 V_{DC} ± 5% 200 mA, 5 W External power +24 V_{DC}: max. voltage 30 V_{DC}, min. voltage 19 V_{DC}, 30 W ON: the activation current is 6.5 mA; OFF: leakage current tolerance is 10 μA
	MO10~MO11	Multi-function output terminals (photocoupler) Duty-cycle: 50%; Max. output frequency: 100 Hz Max. current: 50 mA; Max. voltage: 48 V_{DC}
	MXM	Common for multi-function output terminals MO10, MO11 (photocoupler) Max. 48 V_{DC} 50 mA

24V Power Shift Card

▪ EMC-BPS01

	Terminals	Descriptions
	24V GND	Allows operation of network system, PLC function and partial functions when the AC motor drive is power off Input power: 24 V_{DC} ± 5% Maximum input current: 0.5A Note: 1. Do not connect the control terminal +24V (Digital control signal common: SOURCE) directly to the EMC-BPS01 input terminal 24V. 2. Do not connect control terminal GND directly to the EMC-BPS01 input terminal GND

Communication Card

▪ EMC-COP01 (CANopen)

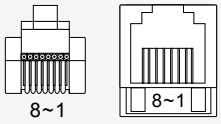

RJ-45 Pin	Pin name	Definition
1	CAN_H	CAN_H bus line (dominant high)
2	CAN_L	CAN_L bus line (dominant low)
3	CAN_GND	Ground/0V/V-
6	CAN_GND	Ground/0V/V-

▪ CMC-EC01 (EtherCAT)

Features

- Supports EtherneCAT protocol
- Supports standard CiA402 speed mode
- Supports SDO (Service Data Objects) function:
  - To write motor drive parameters
  - To read motor drive information
- Auto shutdown function for interruptions during data transmission

Network Interface

Interface	RJ-45	**Transmission cable**	Category 5e shielded cable, 100M
Number of ports	2 Ports	**Transmission speed**	100Mbps
Transmission method	IEEE 802.3, IEEE 802.3u	**Network protocol**	EtherCAT

Communication Card

▪ CMC-PN01 (PROFINET) NEW

Features

- Supports PROFINET IO device
- Supports synchronous data transmission and synchronous parameter access
- Provides GSDML file for PROFINET communication

Network Interface

Interface	RJ-45	**Transmission Cable**	Category 5e shielded cable, 100M
Number of Ports	2 Ports	**Transmission Speed**	10/100 Mbps auto-detection
Transmission Method	IEEE 802.3	**Network Protocol**	PROFINET

▪ CMC-PD01 (PROFIBUS DP)

Features

- Supports PZD control data exchange
- Supports PKW polling AC motor drive parameters
- Supports user diagnosis function
- Supports remote I/O function
- Baud (auto-detection): max. 12 Mbps

PROFIBUS DP Connector

Interface	DB9 connector
Transmission Method	High-speed RS-485
Transmission Cable	Shielded twisted pair cable
Electrical Isolation	500 V_{DC}

Communication

Message Type	Cyclic data exchange
Module Name	CMC-PD01
GSD Document	DELA08DB.GSD
Company ID	08DB (HEX)
Serial Transmission Speed Supported (auto-detection)	9.6 Kbps; 19.2 Kbps; 93.75 Kbps; 187.5 Kbps; 500 Kbps; 1.5 Mbps; 3 Mbps; 6 Mbps; 12 Mbps (bits per second)

▪ CMC-DN01

Features

- Performs immediate control of an AC motor drive via Delta's HSSP high-speed communication protocol
- Supports Group 2 Only Slave device connection and polling I/O data exchange
- Supports max. 32 words input / 32 words output and remote I/O function for I/O mapping
- Node address and serial transmission speed can be set up on AC motor drive
- Power supplied from AC motor drive

DeviceNet Connector

Interface	5-Pin 5.08 mm Pluggable Connector
Transmission Method	CAN
Transmission Cable	Shielded twisted pair cable (with 2 power cables)
Transmission Speed	125 Kbps, 250 Kbps, 500 Kbps and extendable serial transmission speed mode
Network Protocol	DeviceNet protocol

DeviceNet Connector

Interface	50-Pin communication terminal
Transmission Method	SPI communication
Terminal Function	1. Communicating with AC motor drive 2. Transmitting power supply from AC motor drive
Communication Protocol	Delta HSSP protocol

▪ CMC-EIP01 (EtherNet/IP, Modbus TCP)

Features

- Supports EtherNet/IP and Modbus TCP protocols
- User-defined parameter mapping
- IP Filter, basic firewall function

Network Interface

Interface	RJ-45 with Auto-MDI/MDIX	**Transmission Cable**	Category 5e shielded cable, 100 M
Number of Ports	1 Port	**Transmission Speed**	10/100 Mbps auto-detection
Transmission Method	IEEE 802.3, IEEE 802.3u	**Network Protocol**	ICMP, IP, TCP, UDP, DHCP, BOOTP, SMTP, EtherNet/IP, Modbus TCP

▪ CMC-EIP02 (EtherNet/IP、Modbus TCP dual port) NEW

Features

- Supports Daisy Chain Topology
- MDI/MDI-X auto-detection
- Supports Ethernet configuration profiles for AC motor drives
- Supports virtual serial ports

Network Interface

Interface	RJ-45 with Auto-MDI/MDIX	**Transmission Cable**	Category 5e shielded cable, 100 M
Number of Ports	2 (Switch)	**Transmission Speed**	10/100 Mbps auto-detection
Transmission Method	IEEE 802.3、IEEE 802.3u	**Network Protocol**	ICMP, IP, TCP, UDP, DHCP, BOOTP, EtherNet/IP, Modbus TCP

Delta Standard Fieldbus Cables

Delta Cables	Part Number	Description	Length
CANopen Cable	UC-CMC003-01A	CANopen cable, RJ45 connector	0.3 m
	UC-CMC005-01A	CANopen cable, RJ45 connector	0.5 m
	UC-CMC010-01A	CANopen cable, RJ45 connector	1 m
	UC-CMC015-01A	CANopen cable, RJ45 connector	1.5 m
	UC-CMC020-01A	CANopen cable, RJ45 connector	2 m
	UC-CMC030-01A	CANopen cable, RJ45 connector	3 m
	UC-CMC050-01A	CANopen cable, RJ45 connector	5 m
	UC-CMC100-01A	CANopen cable, RJ45 connector	10 m
	UC-CMC200-01A	CANopen cable, RJ45 connector	20 m
DeviceNet Cable	UC-DN01Z-01A	DeviceNet cable	305 m
	UC-DN01Z-02A	DeviceNet cable	305 m
EtherNet Cable	UC-EMC003-02A	Shielded Ethernet cable	0.3 m
	UC-EMC005-02A	Shielded Ethernet cable	0.5 m
	UC-EMC010-02A	Shielded Ethernet cable	1 m
	UC-EMC020-02A	Shielded Ethernet cable	2 m
	UC-EMC050-02A	Shielded Ethernet cable	5 m
	UC-EMC100-02A	Shielded Ethernet cable	10 m
	UC-EMC200-02A	Shielded Ethernet cable	20 m
PROFIBUS Cable	UC-PF01Z-01A	PROFIBUS DP cable	305 m

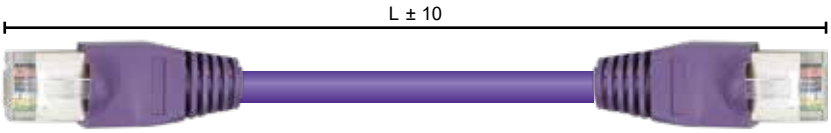

CANopen / DeviceNet TAP Breakout Boxes

Part Number	Description
TAP-CN01	1 in 2 out, built-in 121Ω terminal resistor
TAP-CN02	1 in 4 out, built-in 121Ω terminal resistor
TAP-CN03	1 in 4 out, RJ45 connector, built-in 121Ω terminal resistor

Unit: mm [inch]

66 [2.6]

TAP-CN01

87 [3.4]

TAP-CN02

66.5 [2.6]

TAP-CN03

Other Accessories

Please refer to the user manual Chapter 7 for more details of the sizes, installation illustrations, and precautions.

Part Number	Description	Part Number	Description
Digital Operator		**USB/RS-485 Converter**	
KPC-CC01	Communicates via RTU 19200/8-N-2. After the communication parameters are configured, the C2000 Plus can connect with the KPC-CC01	**IFD6530**	No need for an external power supply to convert RS-485 to USB or vice versa; enables connection between the C2000 Plus and PC/Notebook for Delta's software operation (VFDSoft, WPLSoft, ISPSoft, DIAStudio)
MKC-KPPK	Suitable for flange installation or flat-faced flange installation to the exterior of the digital operator KPPC-CC01 cabinet. The IP66-rated panel of the digital operator allows easy operation for a drive cabinet	**For Wall Penetrating Installation**	
		MKC-AFM	For Frame A
		MKC-AFM1	For Frame A *2
		MKC-BFM	For Frame B
RJ45 Extension Cable	Please refer to Delta Standard Field Cables	**MKC-CFM**	For Frame C
Conduit Box *1		**Power Terminal Converter Board**	
MKC-D0N1CB	For Frame D0	**MKC-PTCG**	Converts a power terminal from 12 pulses to 6 pulses and makes the wire diameters of the power terminal and motor drive output terminal identical.
MKC-DN1CB	For Frame D		
MKC-EN1CB	For Frame E	**Capacitance Filter**	
MKC-FN1CB	For Frame F	**CXY101-43A**	Allows simple wave filtering and noise suppression for 230V/460V models when installed to the power input terminals (R, S, T) of the motor drive
MKC-GN1CB	For Frame G	**Cooling Fan**	
MKC-HN1CB	For Frame H; allows floor-standing installation for the motor drive	Cooling fans and fan capacitors can be ordered individually as spare parts for maintenance. Refer to the section 7-9 in the user manual	

Note 1: A VFDxxxCxxA-00 or VFDxxxC43S-00 model installed with a conduit box meets the IP20/NEMA1/UL TYPE1 protection requirements.
Note 2: Available for VFD015C23A-21, VFD022C23A-21, VFD022C43A-21, VFD022C4EA-21, VFD015C53A-21, VFD022C53A-21, VFD037C53A-21

Ordering Information & Series Overview

Frame Size		Power Range	Models			
Frame A		230 V: 0.75 ~ 3.7 kW 460 V: 0.75 ~ 5.5 kW 575 V: 1.5 ~ 3.7 kW	VFD007C23A-21 VFD015C23A-21 VFD022C23A-21 VFD037C23A-21	VFD007C43A-21 VFD015C43A-21 VFD022C43A-21 VFD037C43A-21 VFD040C43A-21 VFD055C43A-21	VFD007C4EA-21 VFD015C4EA-21 VFD022C4EA-21 VFD037C4EA-21 VFD040C4EA-21 VFD055C4EA-21 * Built-in an EMC filter & EMC-COP01	VFD015C53A-21 VFD022C53A-21 VFD037C53A-21
Frame B		230 V: 5.5 ~ 11 kW 460 V: 7.5 ~ 15 kW 575 V: 5.5 ~ 15 kW	VFD055C23A-21 VFD075C23A-21 VFD110C23A-21	VFD075C43A-21 VFD110C43A-21 VFD150C43A-21	VFD075C4EA-21 VFD110C4EA-21 VFD150C4EA-21 * Built-in an EMC filter & EMC-COP01	VFD055C53A-21 VFD075C53A-21 VFD110C53A-21 VFD150C53A-21
Frame C		230 V: 15 ~ 22 kW 460 V: 18.5 ~ 30 kW 690 V: 18.5 ~ 37 kW	VFD150C23A-21 VFD185C23A-21 VFD220C23A-21	VFD185C43A-21 VFD220C43A-21 VFD300C43A-21	VFD185C4EA-21 VFD220C4EA-21 VFD300C4EA-21 * Built-in an EMC filter & EMC-COP01	VFD185C63B-21 VFD220C63B-21 VFD300C63B-21 VFD370C63B-21
Frame D		230 V: 30 ~ 37 kW 460 V: 37 ~ 75 kW 690 V: 45 ~ 55 kW	**Frame_D1** VFD300C23A-00 VFD370C23A-00 VFD550C43A-00 VFD750C43A-00 VFD450C63B-00 VFD550C63B-00	**Frame_D0-1** VFD370C43S-00 VFD450C43S-00	**Frame_D2** VFD300C23A-21 VFD370C23A-21 VFD550C43A-21 VFD750C43A-21 VFD450C63B-21 VFD550C63B-21 * Built-in conduit boxes MKC-DN1CB & EMC-COP01 (available for 43A models only)	**Frame_D0-2** VFD370C43S-21 VFD450C43S-21 * Built-in conduit boxes MKC-D0N1CB & EMC-COP01
Frame E		230 V: 45 ~ 75 kW 460 V: 90 ~ 110 kW 690 V: 75 ~ 132 kW	**Frame_E1** VFD450C23A-00 VFD550C23A-00 VFD750C23A-00 VFD900C43A-00 VFD1100C43A-00 VFD750C63B-00 VFD900C63B-00 VFD1100C63B-00 VFD1320C63B-00		**Frame_E2** VFD450C23A-21 VFD550C23A-21 VFD750C23A-21 VFD900C43A-21 VFD1100C43A-21 VFD750C63B-21 VFD900C63B-21 VFD1100C63B-21 VFD1320C63B-21 * Built-in conduit boxes MKC-EN1CB & EMC-COP01 (available for 43A models only)	
Frame F		230 V: 90 kW 460 V: 132 ~ 160 kW 690 V: 160 ~ 200 kW	**Frame_F1** VFD900C23A-00 VFD1320C43A-00 VFD1600C43A-00 VFD1600C63B-00 VFD2000C63B-00		**Frame_F2** VFD900C23A-21 VFD1320C43A-21 VFD1600C43A-21 VFD1600C63B-21 VFD2000C63B-21 * Built-in conduit boxes MKC-FN1CB & EMC-COP01 (available for 43A models only)	

Frame Size		Power Range	Models	
Frame G		460 V: 185 ~ 220 kW 690 V: 250 ~ 315 kW	**Frame_G1** VFD1850C43A-00 VFD2000C43A-00 VFD2200C43A-00 VFD2500C43A-00 VFD2500C63B-00 VFD3150C63B-00	**Frame_G2** VFD1850C43A-21 VFD2000C43A-21 VFD2200C43A-21 VFD2500C43A-21 VFD2500C63B-21 VFD3150C63B-21 * Built-in conduit boxes MKC-GN1CB & EMC-COP01(available for 43A models only)
Frame H		460 V: 280 ~ 560 kW	**Frame_H1** VFD2800C43A-00 VFD3150C43A-00 VFD3550C43A-00 VFD4000C43A-00 VFD4500C43A-00 VFD5000C43A-00 VFD5600C43A-00	**Frame_H3** VFD2800C43C-21 VFD3150C43C-21 VFD3550C43C-21 VFD4000C43C-21 VFD4500C43C-21 VFD5000C43C-21 VFD5600C43C-21 * Built-in conduit boxes MKC-HN1CB & EMC-COP01
Frame H (690 V Model)		690 V: 400 ~ 630 kW	**Frame_H1** VFD4000C63B-00 VFD4500C63B-00 VFD5600C63B-00 VFD6300C63B-00	**Frame_H2** VFD4000C63B-21 VFD4500C63B-21 VFD5600C63B-21 VFD6300C63B-21 * Built-in conduit box MKC-HN1CB

Global Operations

ASIA (Taiwan)

Taoyuan Technology Center (Green Building)

Taoyuan Plant 1

Tainan Plant (Diamond-rated Green Building)

ASIA (China)

Wujiang Plant 3

Shanghai Office

▲ 8 Factor

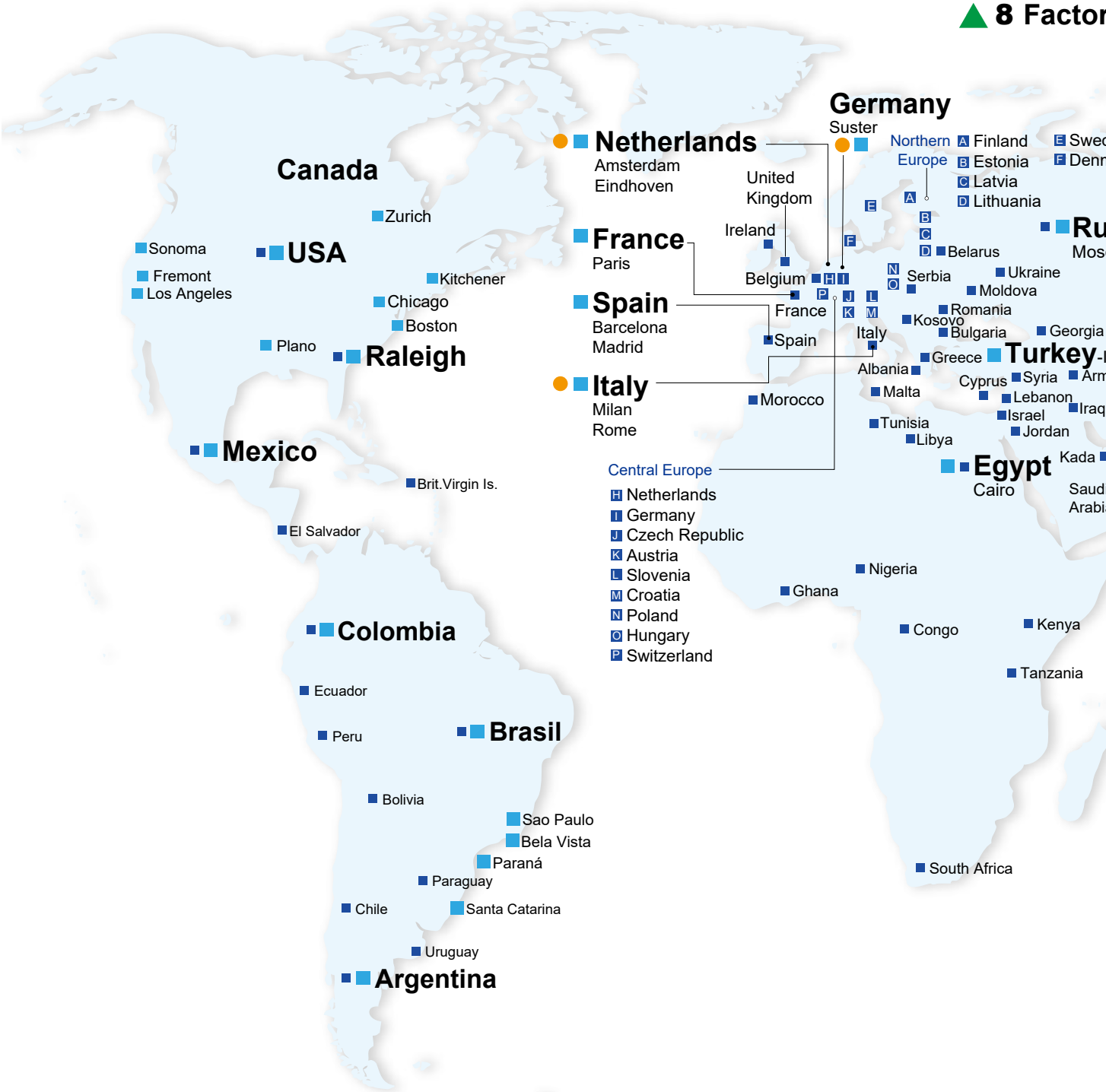

ASIA (Japan)

Tokyo Office

ASIA (India)

Rudrapur Plant
(Green Building)

EUROPE

Amsterdam, the Netherlands

AMERICA

Research Triangle Park, U.S.A.

ries

112 Branch Offices

13 R&D Centers

909 Distributors

1 Northeast Region
Harbin
Changchun
Shenyang
Dalian

2 Shanghai-Hangzhou Region
Hangzhou
Jiading
Ningbo
Shanghai
Shaoxing
Songjiang
Wenzhou
Kunshan

3 North China Region
Baotou
Beijing
Hengyang
Jinan
Luoyang
Qinhuangdao
Qingdao
Shijiazhuang
Taiyuan
Tangshan
Tianjin
Xiangyang
Yantai
Changyuan
Zhengzhou

4 South China Region
Foshan
Fuzhou
Guangzhou
Guiyang
Guilin
Liuzhou
Nanning
Quanzhou
Xiamen
Shenzhen

5 Central China Region
Nanchang
Wuhan
Changsha

7 West China Region
Chengdu
Lanzhou
Xi'an
Chongqing
Urumqi

6 Suwan Region
Hefei
Nanjing
Nantong
Suzhou
Wuxi
Wuhu
Xuzhou
Yangzhou

Smarter. Greener. Together.

Industrial Automation Headquarters

Taiwan: Delta Electronics, Inc.
Taoyuan Technology Center
No.18, Xinglong Rd., Taoyuan District,
Taoyuan City 33068, Taiwan
TEL: +886-3-362-6301 / FAX: +886-3-371-6301

Asia

China: Delta Electronics (Shanghai) Co., Ltd.
No.182 Minyu Rd., Pudong Shanghai, P.R.C.
Post code : 201209
TEL: +86-21-6872-3988 / FAX: +86-21-6872-3996
Customer Service: 400-820-9595

Japan: Delta Electronics (Japan), Inc.
Industrial Automation Sales Department
2-1-14 Shibadaimon, Minato-ku
Tokyo, Japan 105-0012
TEL: +81-3-5733-1155 / FAX: +81-3-5733-1255

Korea: Delta Electronics (Korea), Inc.
1511, 219, Gasan Digital 1-Ro., Geumcheon-gu,
Seoul, 08501 South Korea
TEL: +82-2-515-5305 / FAX: +82-2-515-5302

Singapore: Delta Energy Systems (Singapore) Pte Ltd.
4 Kaki Bukit Avenue 1, #05-04, Singapore 417939
TEL: +65-6747-5155 / FAX: +65-6744-9228

India: Delta Electronics (India) Pvt. Ltd.
Plot No.43, Sector 35, HSIIDC Gurgaon,
PIN 122001, Haryana, India
TEL: +91-124-4874900 / FAX: +91-124-4874945

Thailand: Delta Electronics (Thailand) PCL.
909 Soi 9, Moo 4, Bangpoo Industrial Estate (E.P.Z),
Pattana 1 Rd., T.Phraksa, A.Muang,
Samutprakarn 10280, Thailand
TEL: +66-2709-2800 / FAX: +66-2709-2827

Australia: Delta Electronics (Australia) Pty Ltd.
Unit 20-21/45 Normanby Rd., Notting Hill Vic 3168, Australia
TEL: +61-3-9543-3720

Americas

USA: Delta Electronics (Americas) Ltd.
5101 Davis Drive, Research Triangle Park, NC 27709, U.S.A.
TEL: +1-919-767-3813 / FAX: +1-919-767-3969

Brazil: Delta Electronics Brazil
Rua Itapeva, 26 - 3°, andar Edificio Itapeva,
One - Bela Vista 01332-000 - São Paulo - SP - Brazil
TEL: +55-12-3932-2300 / FAX: +55-12-3932-237

Mexico: Delta Electronics International Mexico S.A. de C.V.
Gustavo Baz No. 309 Edificio E PB 103
Colonia La Loma, CP 54060
Tlalnepantla, Estado de México
TEL: +52-55-3603-9200

EMEA

EMEA Headquarters: Delta Electronics (Netherlands) B.V.
Sales: Sales.IA.EMEA@deltaww.com
Marketing: Marketing.IA.EMEA@deltaww.com
Technical Support: iatechnicalsupport@deltaww.com
Customer Support: Customer-Support@deltaww.com
Service: Service.IA.emea@deltaww.com
TEL: +31(0)40 800 3900

BENELUX: Delta Electronics (Netherlands) B.V.
Automotive Campus 260, 5708 JZ Helmond, The Netherlands
Mail: Sales.IA.Benelux@deltaww.com
TEL: +31(0)40 800 3900

DACH: Delta Electronics (Netherlands) B.V.
Coesterweg 45, D-59494 Soest, Germany
Mail: Sales.IA.DACH@deltaww.com
TEL: +49(0)2921 987 0

France: Delta Electronics (France) S.A.
ZI du bois Challand 2, 15 rue des Pyrénées,
Lisses, 91090 Evry Cedex, France
Mail: Sales.IA.FR@deltaww.com
TEL: +33(0)1 69 77 82 60

Iberia: Delta Electronics Solutions (Spain) S.L.U
Ctra. De Villaverde a Vallecas, 265 1º Dcha Ed.
Hormigueras – P.I. de Vallecas 28031 Madrid
TEL: +34(0)91 223 74 20

Carrer Llacuna 166, 08018 Barcelona, Spain
Mail: Sales.IA.Iberia@deltaww.com

Italy: Delta Electronics (Italy) S.r.l.
Via Meda 2–22060 Novedrate(CO)
Piazza Grazioli 18 00186 Roma Italy
Mail: Sales.IA.Italy@deltaww.com
TEL: +39 039 8900365

Russia: Delta Energy System LLC
Vereyskaya Plaza II, office 112 Vereyskaya str.
17 121357 Moscow Russia
Mail: Sales.IA.RU@deltaww.com
TEL: +7 495 644 3240

Turkey: Delta Greentech Elektronik San. Ltd. Sti. (Turkey)
Şerifali Mah. Hendem Cad. Kule Sok. No:16-A
34775 Ümraniye – İstanbul
Mail: Sales.IA.Turkey@deltaww.com
TEL: + 90 216 499 9910

MEA: Eltek Dubai (Eltek MEA DMCC)
OFFICE 2504, 25th Floor, Saba Tower 1,
Jumeirah Lakes Towers, Dubai, UAE
Mail: Sales.IA.MEA@deltaww.com
TEL: +971(0)4 2690148

*We reserve the right to change the information in this catalogue without prior notice.

DELTA_ IA-MDS_C2000 Plus_C_EN_20201117